the **precision** benchmark

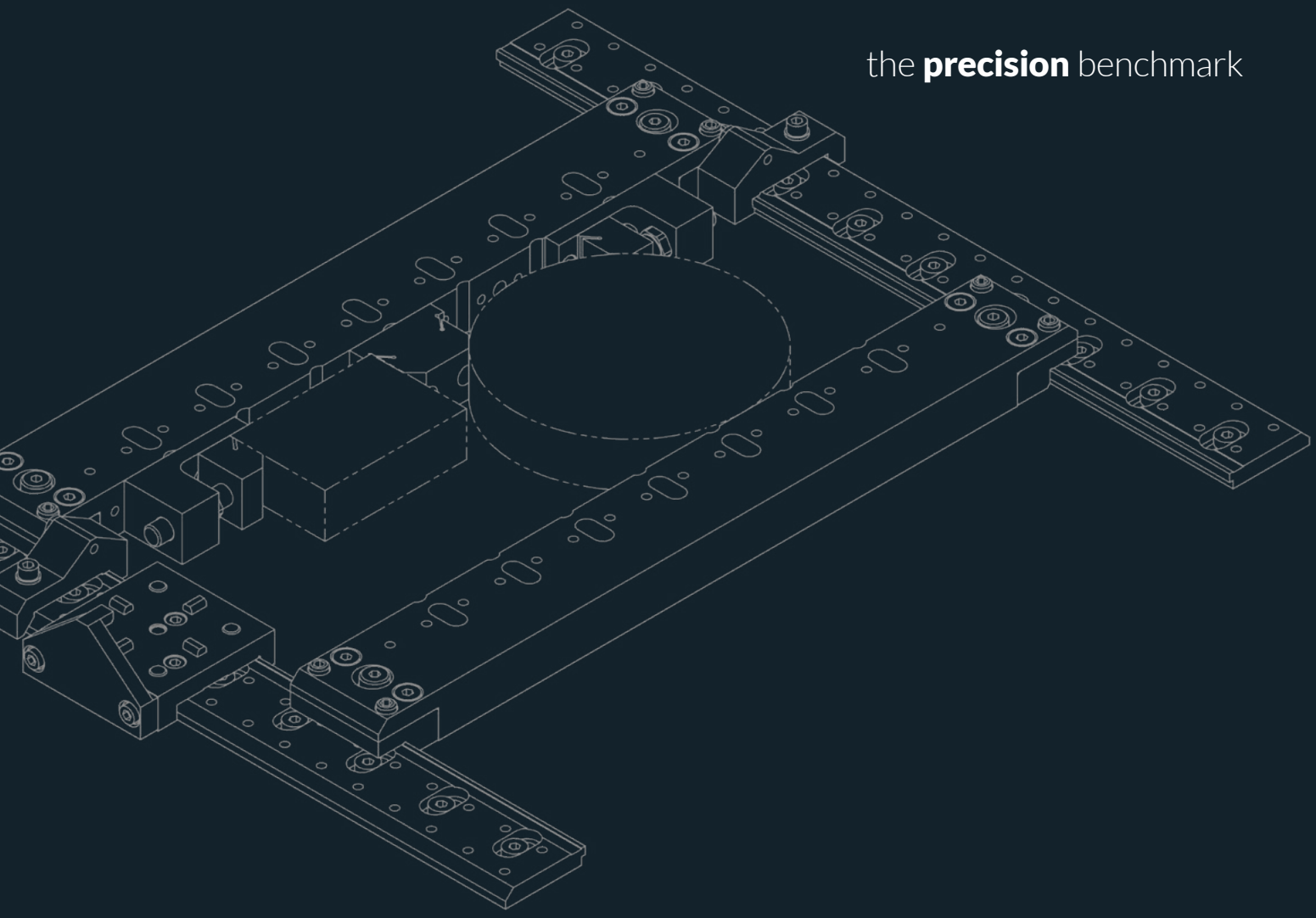

Clamping System 4000

For wire EDM

CARL HIRSCH MANN

EN2326

Carl Hirschmann GmbH

Precision as passion

Highest precision is the distinctive trademark of our clamping systems. With great passion and deep special know how we develop and manufacture trend-setting products for your ambitious requirements – since decades and with increasing enthusiasm. As leading manufacturer in clamping technology for EDM, milling, turning and measuring machines as well as machining centers we convince with competence in solutions and innovative conceptional results. We are the system provider with perfected engineering for clamping projects.

Carl Hirschmann – the precision benchmark

As frame/beam system or as pallet system and holder system with a repetitive accuracy of ≤ 2 µm our Clamping System 4000 is suitable for wire EDM. Already our standard assortment covers a wide range and for your specific requirements we design and produce individual configurated palletizing and clamping systems up to assembling in the metal-cutting machine. The tight cooperation with the customer guarantees perfect results also for complex challenges.
Take benefit of our full service out of one source. Our Clamping System 4000 offers you unbeatable advantages on global market.

Contents

Operation, quality, warranty	3
Selection criteria	4-5
Frame / beam system, basic set	6-7
Beams, support plate - holders, accessories	8-9
Beam vise kit, beam accessories	10-11
Pallet System, 3-D pallets	12-13
Pallet clamper, pallets	14-15
Mighty vises	16-17
Prism vises	18-19
Vertical vises	20-21
Uni-holder, clamping angle, magnet holder	22-23
Basic holder, accessories	24-25
Pallet clamper, vertical-/ swivelling unit accessories	26-27
Set-up and presetting stations	28
Custom made products	29-31
Indexing Rotating Spindles, accessories	32-33
Rotary Indexing Tables	34
Our Clamping Systems - overview	35

Operation

Most tools are supplied together with an operating guide. Correct operation cannot be ensured and danger to personnel and machine cannot be excluded unless these operating instructions or information given in this catalogue are observed.

Precision

The individual tool planes incorporate hardened and precision ground X and Y centering prisms and separate Z-supports. This assures position centering of each tool with a repetitive accuracy (consistency) of ≤ 0.002 mm (0.000080).

Service and maintenance

Since the Clamping System is subject to chemical and physical influences, maintenance and service has to be performed with special care.

Technical modification

All products shown in this catalogue are subject to ongoing improvements and developments; we reserve the right to make modifications without notice.

Quality according to ISO 9001 and EN 9100

All products of Carl Hirschmann GmbH are manufactured using the latest production methods. All products are submitted for ISO 9001 and EN 9100 (air and space industry standard) quality assurance.

Warranty

We provide a 12 month warranty for all Clamping System parts starting from the invoice date, and assuming correct use and maintenance as specified has been observed.
The warranty is restricted to replacement or repair, free of charge, of any defective parts. Claims arising from improper use or handling shall not be considered. Warranty claims must be submitted in writing.

Clamping System 4000

Selection criteria

Today, cost reduction and adherence to schedules are most important requirements to survive in the market. Universal solutions with intelligent, modular clamping systems and presetting stations, which reduce adjusting, measuring and presetting on the machine to a minimum, provide the maximum productivity of the machine.
To select the right clamping elements and holders an inventory of the actual state of the available machines and workpiece dimensions to be machined by EDM is necessary. Based on these data the components of the clamping system will be selected according to manufacturing criteria and flexibility (dimensions, accuracy, stability, clamping possibilities, automatic changeability, price etc.).

Advantages

- Optimization of productivity through better utilization of the machine
- Higher profits due to decreased down time
- Flexibility for production or job shop applications
- Set-up and presetting of workpieces outside the machine tool
- Reliable accuracy from presetting to the machine tool, no re-adjustment necessary
- Justifiable cost, that are easily amortized

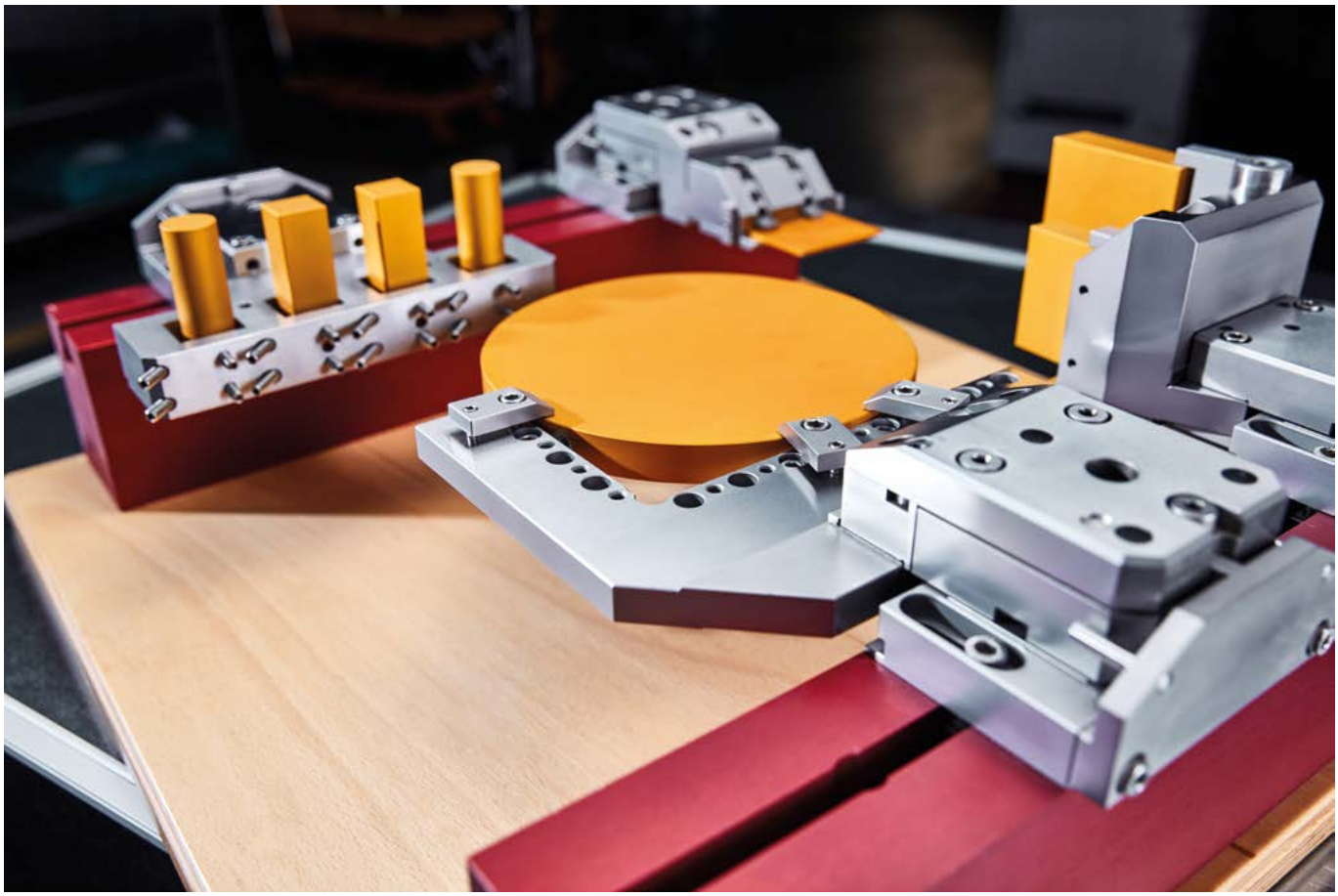

Selection of the system

Carl Hirschmann offers, according to size and weight of the workpieces, two possibilities of workpiece clamping. Both versions can also be combined with each other and later can be extended on customer's demand. Beginning with the low-cost basic set 4000 plus (frame/beam system) which at any time can be completed and extended (e.g., with palletizing system), is always the right decision when no precise criteria are known.

- With the Frame/Beam System rectangular, round, thick and thin workpieces in various dimensions and with weight up to more than 150 kg (330 lbs) can be fixed.

- The Pallet System with suitable holders and fixtures (if necessary, with special holders) the system can excellently be used for workpiece weights to 30 kg (66 lbs) and dimensions to approx. 220x180 mm (7.88x7.09"), because it offers the most possible flexibility for clamping and adjusting versions. In addition, with handling units and robots the pallets can be changed automatically.

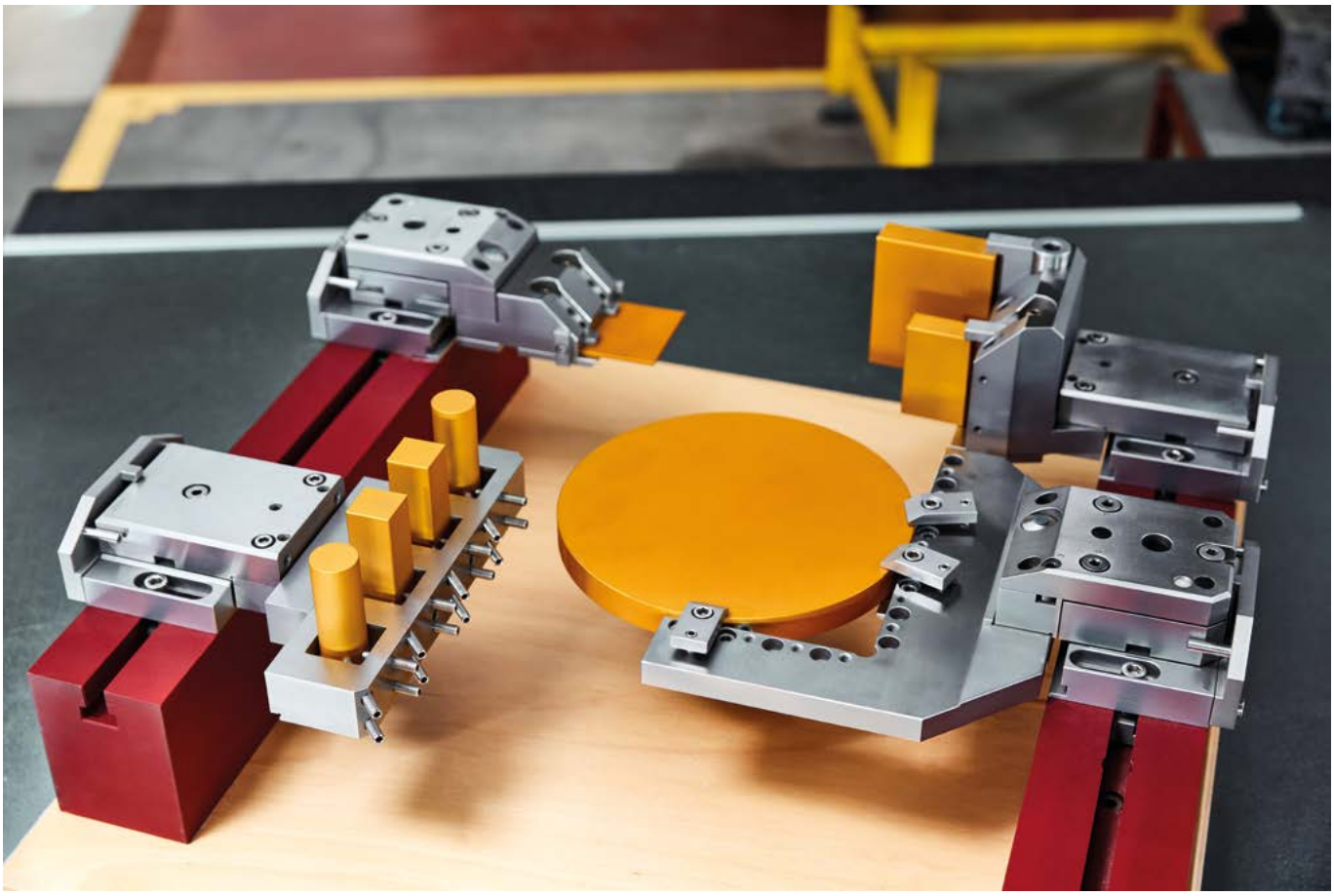

Clamping System4000

Frame/beam system - basic set

For universal and quick clamping of workpieces up to 150 kg (330 lbs).

Workpieces can be clamped crash-free inside machine's cutting area, between or on the adjustable cross Q-beams. Supporting plates can be mounted simple and quickly at the cross Q-beams to help position and support large and heavy workpieces on the Z-zero surface. Workpieces can be adjusted for flatness using the levelling screws integrated in the cross Q-beams.

To avoid collision of the lower wire guide with supporting plate, the cross Q-beam can be mounted in two heights by either inserting or removing the "Z" height spacers. This allows positioning the workpiece at Z-zero or 6 mm (0.240") above. Small workpieces can also be clamped directly at the cross Q-beams by using other devices shown in this catalogue.

The clamper H 4300 can be mounted on basic B-beam in 25 mm (0.980") increments quick clamping of pallets and holders of the Clamping System 4000.

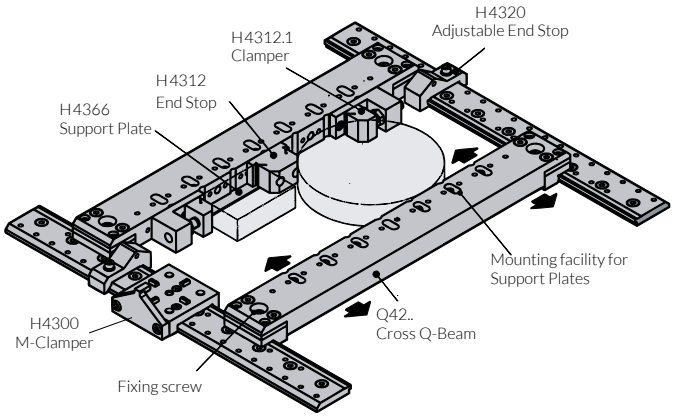

Characteristics

- Workpiece clamping at Z=zero level
- Workpiece weight up to 150 kg (330 lbs)
- Constant accuracy
- Rust-proof
- Set-up possible in- and outside the machine
- Suitable for all Wire EDM

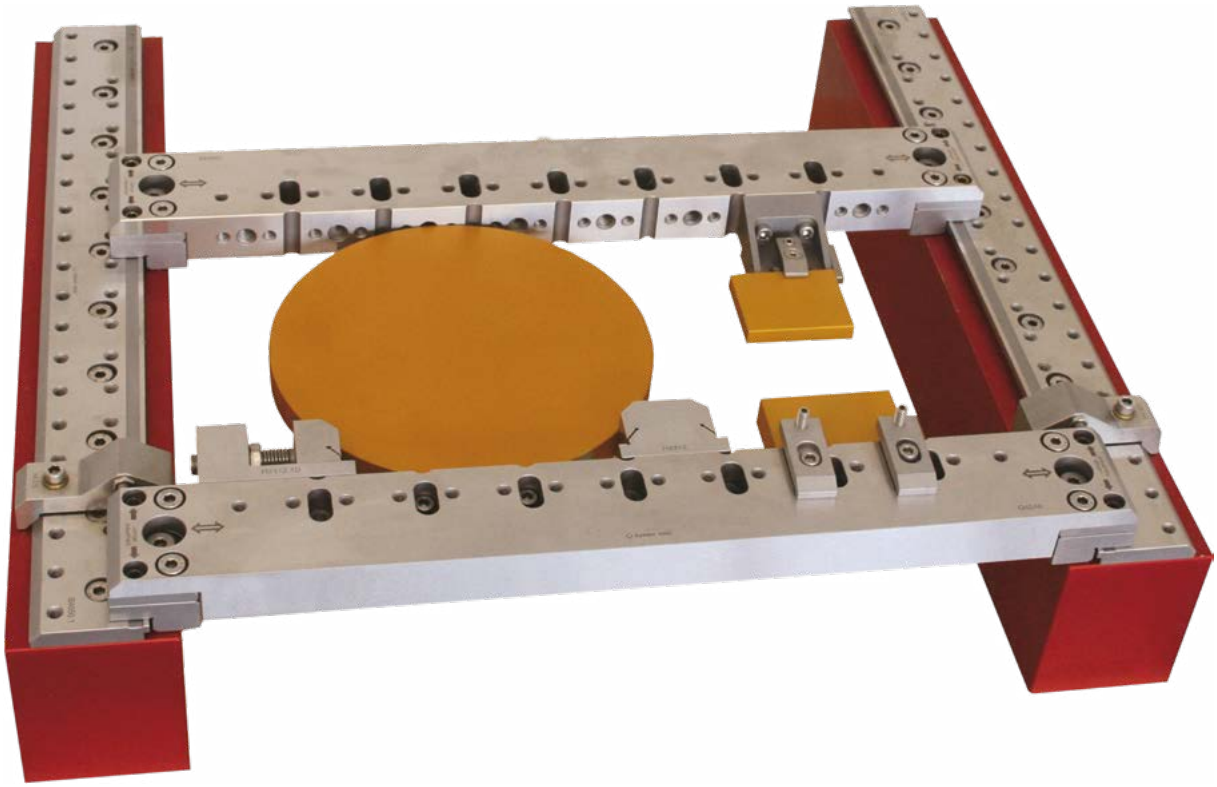

Basic set

The Carl Hirschmann Basic Set is an universal equipment for the wire EDM. It is assembled at Carl Hirschmann and matches to the individual machine model in question.

Almost all workpieces can be clamped inside the cutting area and fixed with a repeatability of ≤ 0.005 mm (0.0002") between the cross beams, which can be inserted from above or from the front. They are infinitely adjustable and quickly locked in any position, using only a few additional clamping elements.

Large workpieces can be clamped directly between cross beams. Support plates are included to help secure or hold the workpiece at the Z-zero level during clamping. Levelling of the workpiece can be done with the built in elements within the cross beam.

To avoid collision of the lower wire guide with the supporting plate, the cross Q-beams can be mounted in two heights by either inserting or removing the "Z" height spacers. This allows positioning the workpiece at Z-zero or 6 mm (0.24") above.

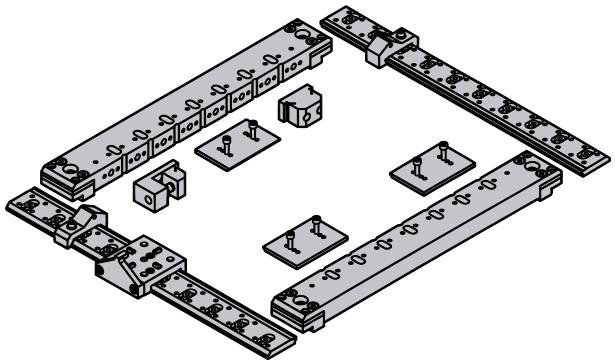

Basic Set 4000 plus

The Carl Hirschmann Basic Set plus is the ideal equipment for Wire EDM machine. Expanding of the set is possible at any time.

Contents:
2 Basic B-beams with fastening screws
2 Cross Q-beams Q 42..
2 Adjustable End Stops H 4320
3 Support Plates H 4366

1 M-Clamper H 4300

1 Beam Vise Kit consisting of: 1 End stop H 4312 and
1 Clamper H 4312.1

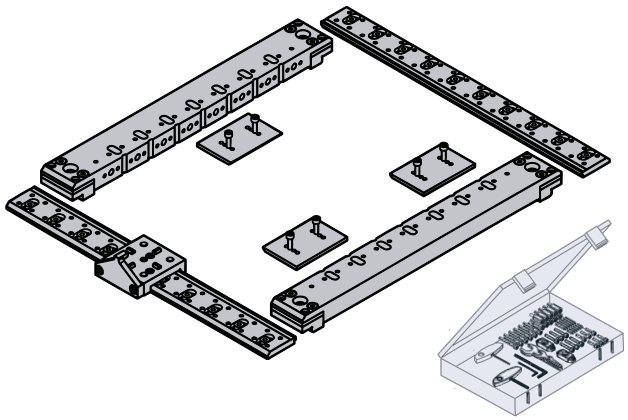

Basic Set 4000

The Basic Set is the economy-priced version of the Basic Set 4000 plus. Expanding the set is possible at any time.

Contents:
2 Basic B-beams B 40.. series, with fastening screws
2 Cross Q-beams Q 42.. series
3 Support Plates H 4366
1 M-Clamper H 4300
1 Clamping Jaw Set H 2850

Clamping System 4000

Beams, support plate - holders, accessories

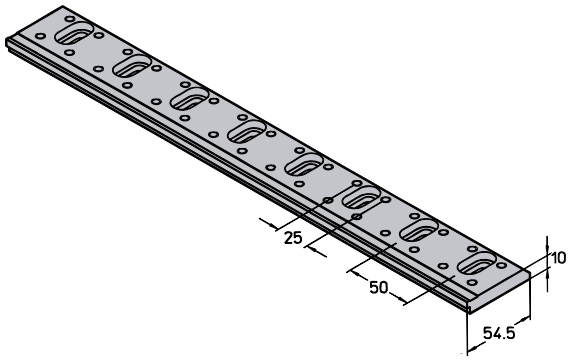

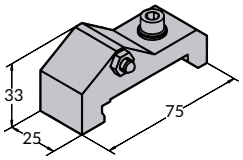

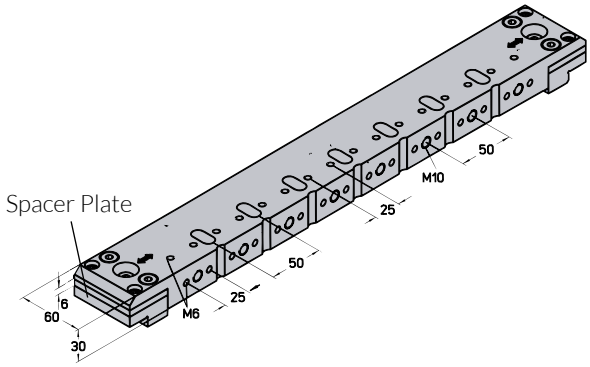

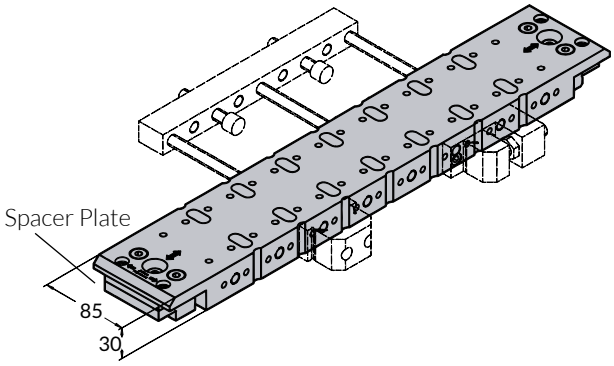

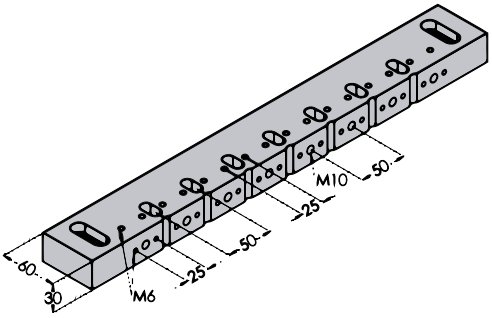

B40.. Basic Beam

Hardened basic beams, fastened to the machine's base with screws, are used to guide and position the cross Q -beams. The Adjustable End Stop H4320 positioned in steps of 25 mm (0.980”) to serve as a reference stop for the Q -beams, the Clamper H4300.

The beams are available in steps of 50 mm (1.97”).

Length and hole pattern of the fastening screws are matched to the machine model in question.

H4320 Adjustable End Stop

The Adjustable End Stop is used on basic beams for repetitive positioning of cross beams.

Positioning and repetitive accuracy ≤0.002 mm (0.00008").

Q42.. Cross Beam

The movable cross Q -beam can be inserted between the basic beam from the top or from the side and can be clamped in any position.

Workpieces mounted directly on the Q -beams, can be adjusted by means of two adjustment screws. Larger workpieces weighing up to 150 kg (330.75 lbs) can be clamped with the assistance of the Support Plates H 4366.

To avoid collision of the lower wire guide with the supporting plate, the cross Q - beam can be mounted 6 mm (0.24") higher by inserting the “Z” height spacers.

Cross beams having a length of more than 600 mm (23.6”) are delivered with a larger cross-section (36 x 85 mm) (1.41" x 3.34") instead of 30 x 60 mm (1.18" x 2.36"), to avoid sagging of the beam because of the large length.

QD42.. Cross Beam

This cross QD -beam can be equipped on both sides with clamping elements and is often used as third beam between standard cross beams.

S40... S-Beam

The S -Beam is fixed directly on the machine table and can be moved within the long hole. All Q -beam accessories (page 9-11) can be used S-beams having a length of more than 700 mm (27,6") are delivered (36 x 85 mm) (1.41" x 3.34").

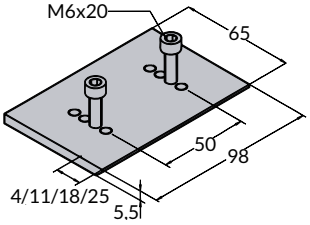

H4366 Support Plate

Support plates are attached to the cross beams and used for clamping or supporting larger workpieces between two cross Q - or S - beams. The support surface is variable between 4 mm (0.16") and 25 mm (0.98"). Workpieces are clamped by clamping jaws of the Clamping Jaw Set H 2850.

Maximum load 50 kg (110.23 lbs).

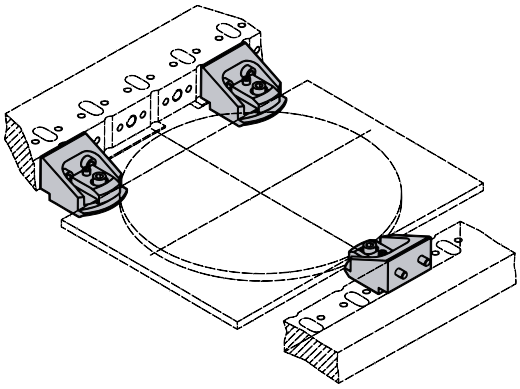

H4315 Supporting holder (3 pcs.)

Supporting holders can be mounted to the cross Q - or S - beams to hold especially thin round and rectangular workpieces.

Workpieces are adjusted with the levelling adjusting device of cross beams.

Maximum load 30 kg (66.15 lbs).

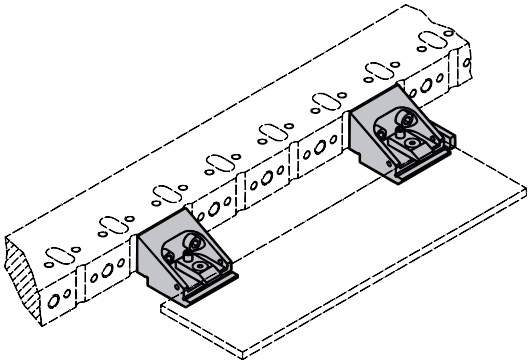

H4315.1 Supporting holder (2 pcs.)

Similar to H4315 but with straight surface, fits for rectangular workpieces up to 10 mm (0.39") thickness.

Changeable lateral stop included.

Maximum load

30 kg (66.15 lbs.)

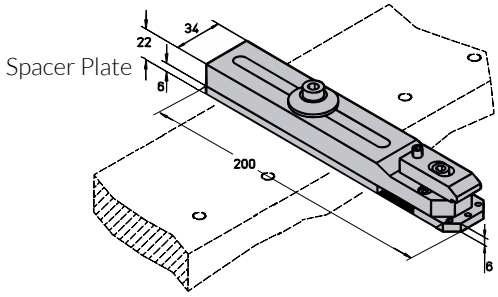

H4265 Countersupport

For supporting workpieces ranging free into cutting area. Countersupport is adjusted directly on machine table.

Level of workpieces is adjustable by 6 mm (0.24") spacers. Workpiece can be adjusted with three setscrews located in the workpiece support.

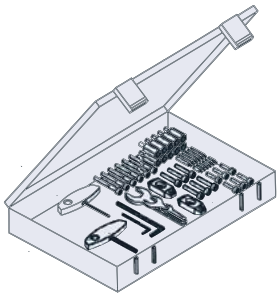

H2850 Clamping Jaw Set

The clamping Jaw Set consists of 4 clamping jaws, 20 supports, bolts M6 length 20 – 40 mm (0.787"–1.575"), setscrews M6 and also open-end M6 and internal-hexagon wrenches.

Delivered in plastic box.

H2851 Clamping Jaw Set

Similar to H2850 but M8.

Clamping System 4000

Beam vise kit, beam accessories

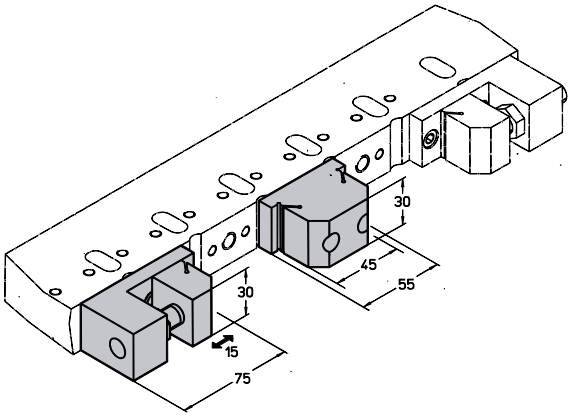

Beam Vise Kit consisting of: H4312 Solid Jaw, H4312.1 Clamper

For collision-free clamping of parallel workpieces directly on the cross beam. Larger cylindrical workpieces are clamped against the second cross beam using the bevelled faces (secured by the Adjustable End Stop H4320).

The presetting of the workpiece should be done on a granite surface plate.

Max. workpiece weight of parallel workpieces with a max. depth of 130 mm (5.12") 30 kg (66.15 lbs)

Max. workpiece weight with support plate at opposite cross beam 100 kg (220.46 lbs)

Max. workpiece weight of cylindrical parts against second cross beam, with 2 end stops 30 kg (66.15 lbs)

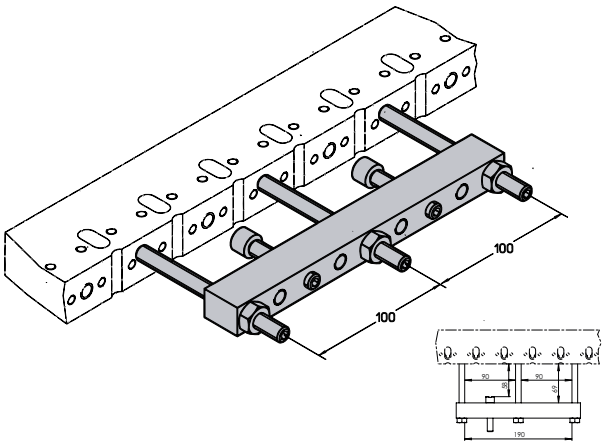

H4331 Clamping Beam

For collision-free clamping of rectangular workpieces and, supplemented by the set of Vee blocks, also for collision-free clamping of cylindrical workpieces, directly on the cross beam/basic holder.

If a Uniholder H4231 is provided, the clamping beam is not required, as these parts are already contained in the uniholder.

Max. permissible workpiece weight 8 kg (17.64 lbs)

H4331L Clamping Beam

with long threaded rods

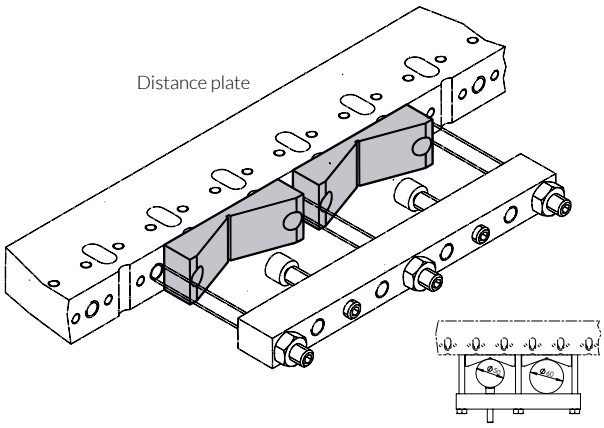

H4332 Set of Vee Blocks (2 pcs.)

For clamping cylindrical workpieces with the Clamping Beam H4331.

Preliminary setting of the workpiece should be done on the granite surface plate.

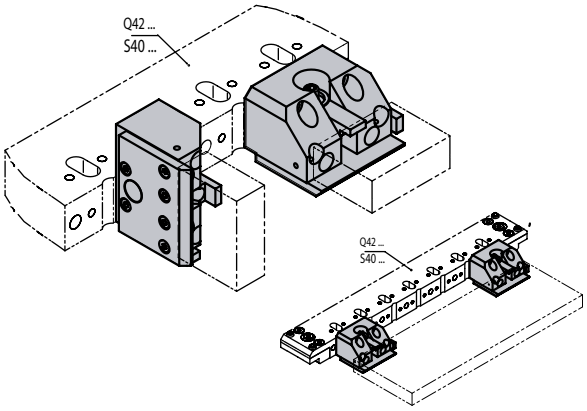

H4317 Uni clamper

For mounting flat workpieces up to 41mm (1.615”) in high.

With end stop on the side. The clamper can be mounted in horizontal or vertical position on the cross beam.

With H4537.E clamping insert the clamping height can be increased up to 60mm (2.364”)

Max. permissible workpiece size	150x100x41mm (5.9x3.94x1.61”)
With clamping insert H4537.E	150x100x60mm (5.9x3.94x2.36”)

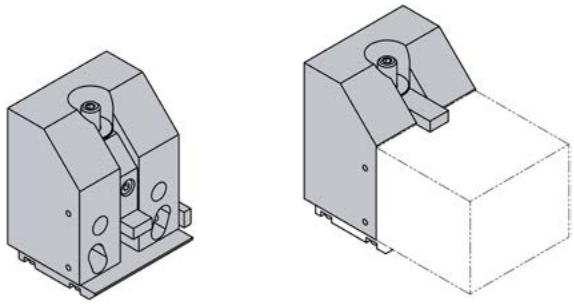

H4318 Uni clamper

For clamping flat workpieces. The clamping range is between 20-115mm (0.79-4.53"). With lateral end stop (can be mounted on both sides). The clamper can be mounted horizontally or vertically on the Q or S bar.

Max. Workpiece dimensions	150x100x115 mm (5,9x3,9x 4.53")

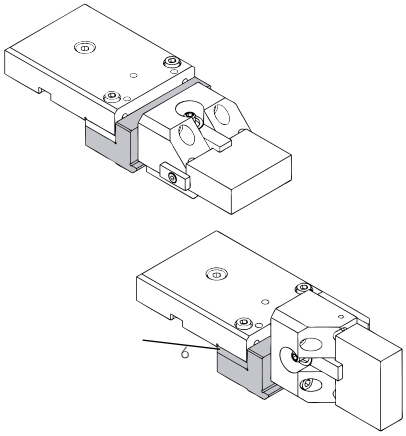

H4317.1 Adapter for Uni Clamper H4317 and H4318

With this adapter, the Uni clamper can be attached horizontally or vertically directly to the H4005, H4105 or H4110M/P pallets.

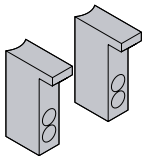

H4537.E Clamping Insert

Via clamping insert H4537.E clamping height of vertical vise H4317 can be increased to 60 mm (2.364").

Delivered as set with 2 inserts.

Clamping System 4000

Pallet system

Pallets with universal holders

The Pallet System can be used in combination with a Basic Set or as a palletized solution for single or multiple parts of small or medium-size.

First, the universal holder of choice is fastened securely to a pallet. The pallet with the holder is then mounted and secured (via manual turning a single screw or by pneumatics) to a clamper which is permanently mounted to a pre-setting station.

The workpieces are clamped in universal holders and are precisely adjustable via a 3D-pallet.

The pallet, holder and workpiece can be transported via hand or with robotic devices to a clamper on the machine tool table.

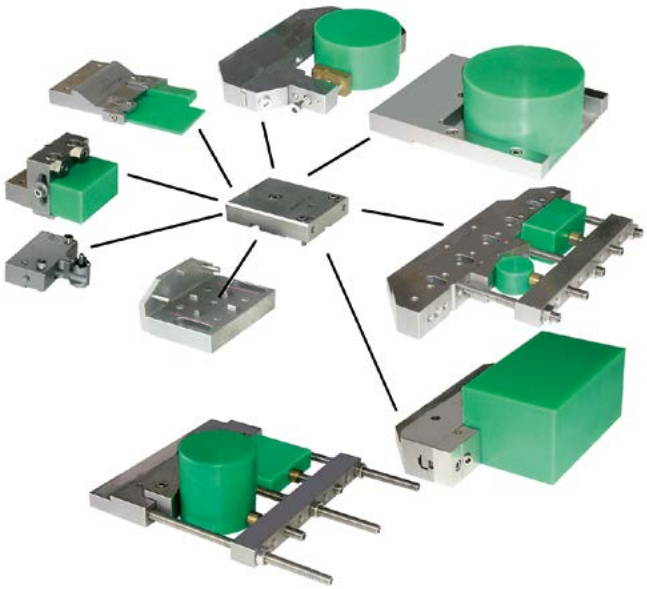

Characteristics

- Workpiece weight up to 30 kg (66.15 lbs)
- ≤ 0.002 mm (0.00008”) repetitive accuracy
- Rust-proof
- Crash-free clamping of workpieces
- Secure and precise set-ups on external presetting station
- Manual and automatic pallet change
- Useable on all EDMs

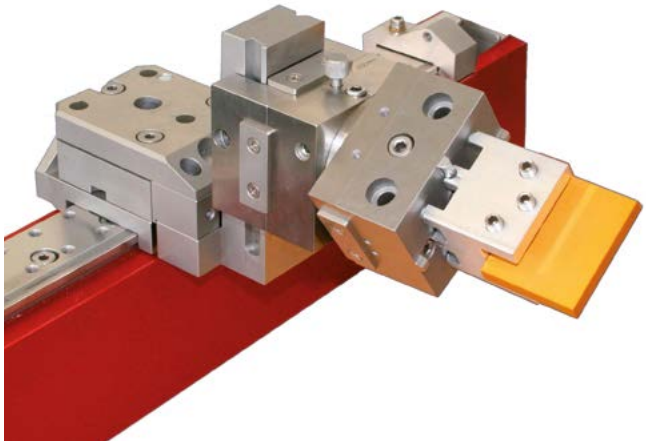

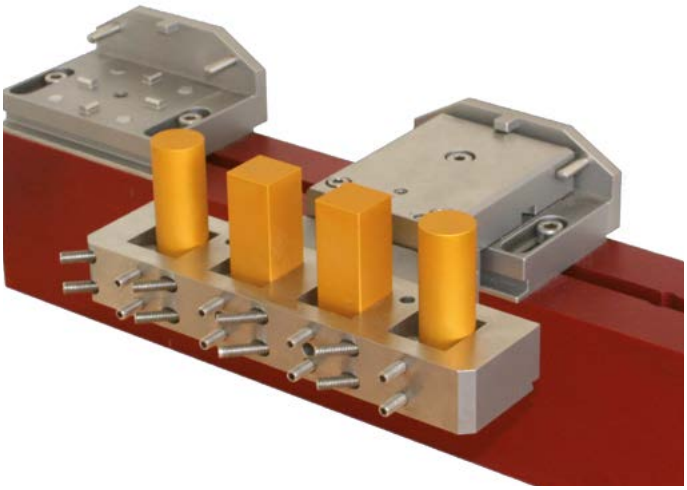

3-D pallets

3-D pallets and presetting stations - indispensable for effeciency in production

Set-up and presetting of workpieces outside the machine releases Wire EDM of unproductive set-up times and significantly reduces machine down time. Workpiece adjustment with Presetting Stations (page 28) and 3-D Pallets is very simple and fast.

3-D Pallet characteristics

- For holder and workpiece weights up to 30 kg (66.15 lbs)
- Wide range of adjustment (0.5 mm/0.0197" on a length of 80 mm/3.152")
- Quick and secure adjustment in X-, Y- and Z-direction
- Vibration free even under high flushing pressure
- Z-surfaces for Z = zero position are insulated against dust
- Quick and easy zero positioning
- Low profil construction allows optimal clearance with upper wire guide
- Cross-hair prism centering not effected by heat
- Rear surface ground parallel to prism for adjusting 3rd axis

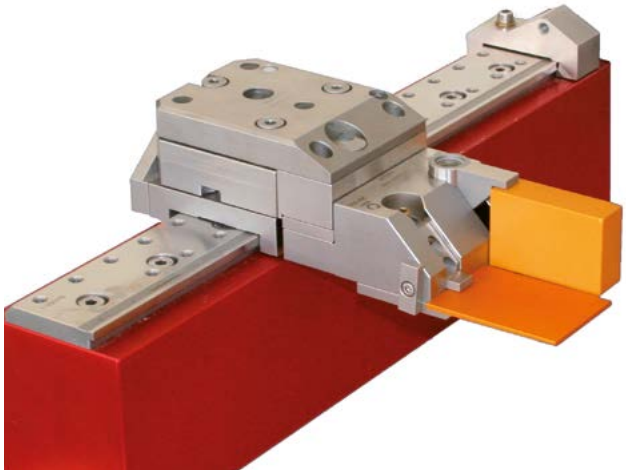

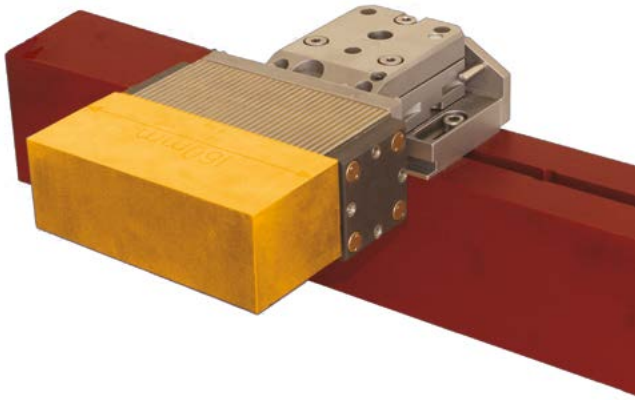

Clamping System 4000

Pallet clamper - pallets

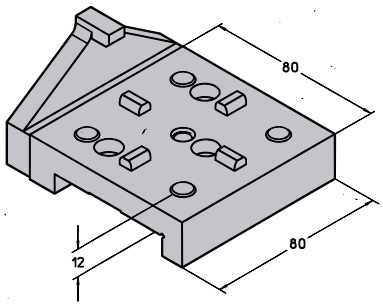

H4300 B-Beam Clamper (manual)

Manual clamper for the precise clamping of the M-Pallets H4005, H4105 and 3D-Pallets, through X & Y centering prisms and separate Z-supports. Central clamping with bolt M8.

The manual clamper is provided with a securing latch for collision-free positioning of the pallets with aligned workpieces.

This clamper or also several clampers are screwed with three screws on the B-beam, at any position in steps of 25 mm (~1").

Permissible workpiece weight, incl. workpiece holder	35 kg (77.17 lbs)
Positioning and repetitive accuracy	≤ 0.002 mm (0.00008")

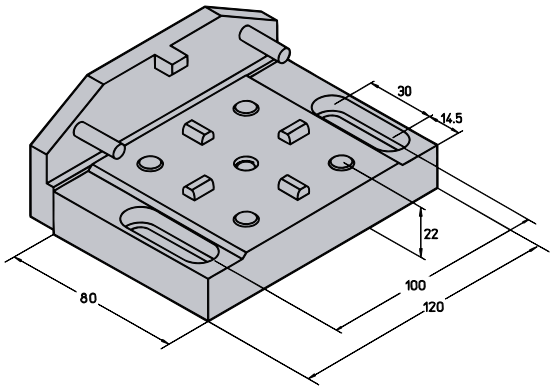

H4000 M-Clamper (manual)

Manual clamper with the same features as the H4300, but mounts to the machine table. Front surface is ground for axis alignment.

The securing latch is equipped with two positioning pins which make the manual positioning of the pallets easier.

Permissible workpiece weight incl. workpiece holder	35 kg (77.17 lbs)
Positioning and repetitive accuracy	≤0.002 mm (0.00008")

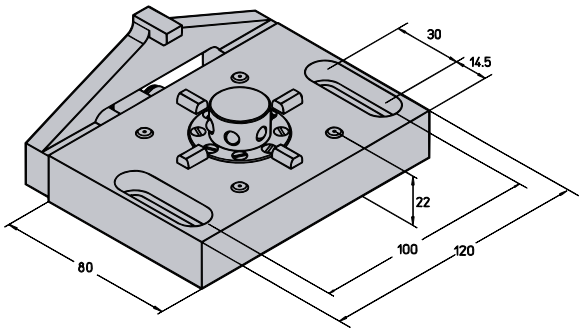

H4100 P-Clamper (pneumatic)

Pneumatic clamper with central power clamping for automatic or manual positioning of the H4105 Pallets and H 4110 P 3D-Pallets. The pneumatic clamper is provided with a securing latch for collision-free positioning of the pallets with aligned workpieces during manual operation.
This clamper is also used for automatic workpiece change with Workpiece Changer or other robotic devices.

Permissible workpiece weight incl. workpiece holder	35 kg (77.17 lbs)
Positioning/repetitive accuracy	≤ 0.002 mm (0.00008")
Compressed air	min. 6 bars

H4100A Covering for P-Clamper

Covers the P-clamper against dirt during operation inside EDM.

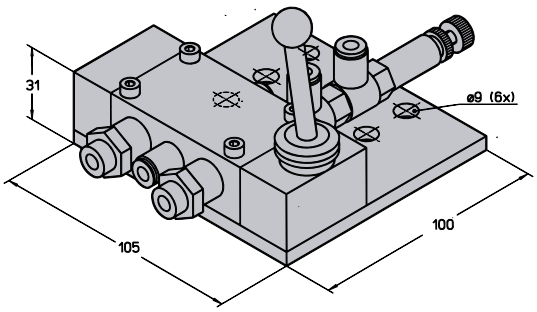

H4101 Pneumatic Control Unit

Manual control unit (valve) to activate functions (opening, clamping, cleaning) of Pneumatic clamper H4100.

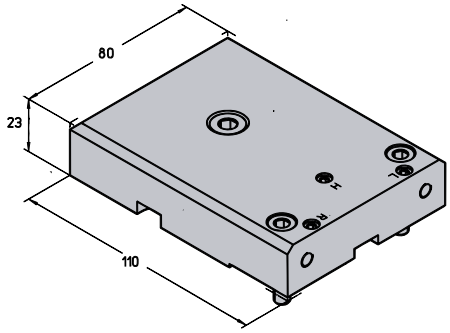

H4005 M-Pallet

For manual changing of workpieces. Fits only to B-Beam Clamper H4300 and M-Clamper H 4000. Two axis levelling is standard.

All workpiece holders of System 4000 can be mounted to the pallet.

Max. workpiece weight, workpiece holder included	30 kg (66.15 lbs)

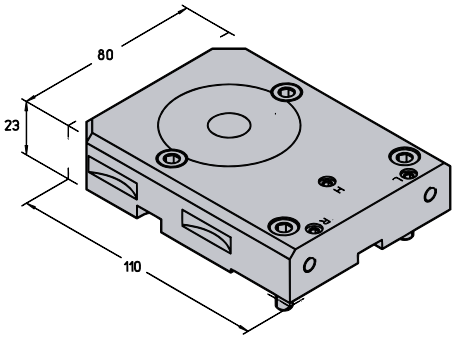

H4105 P-Pallet

For automatic and manual changing of workpieces. Fits to P-Clamper but also to B-Beam Clamper and M-Clamper. Two axis levelling is standard.

Mounting of holders similar to H4005.

Max. workpiece weight, workpiece holder included	30 kg (66.15 lbs)
Pallet weight	1.5 kg (3.30 lbs)

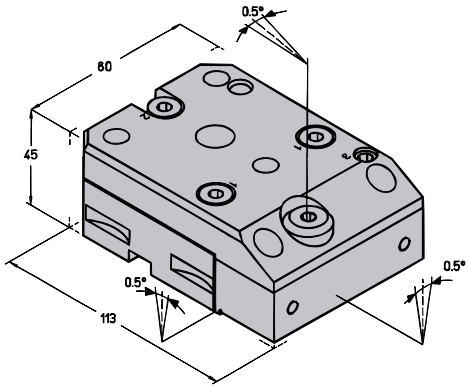

H4110M 3D-Pallet (for M-Clamper)

H4110P 3D-Pallet (for P-Clamper)
For manual and automatic changing of workpieces. Fits to P-Clamper and also to “B”-Beam and M-Clamper. Three axis levelling is standard, quick and easy workpiece alignment in X, Y and Z direction.

Most efficient when used on Presetting Work Station H4900 or Presetting Cube H4905 (see page 28)

Max. workpiece weight, workpiece holder included	30 kg (66.15 lbs)
Pallet weight	2.2 kg (4.8 lbs)

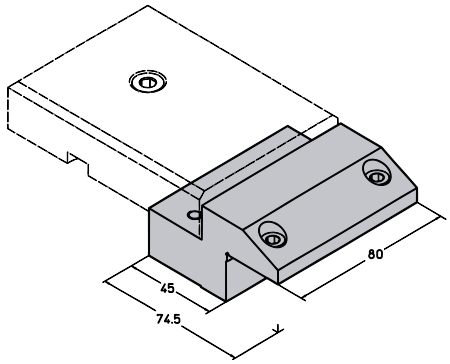

H4260 Pallet Extension Unit

The pallet can be extended by 45 mm (1,76").

Recommended for use of vise H4620.2.

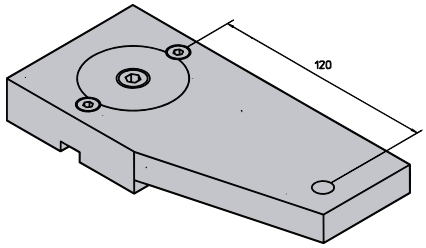

H4120 Reference Pallet

For referencing the coordinate position of the reference hole of H4120 from the measuring machine to the Wire EDM and for alignment and check the position of clampers at the longitudinal side of the reference pallet, rectangular ground to the positioning Vee block.

This Reference Pallet avoids reference movements of the machine.

Clamping System 4000

Mighty vises

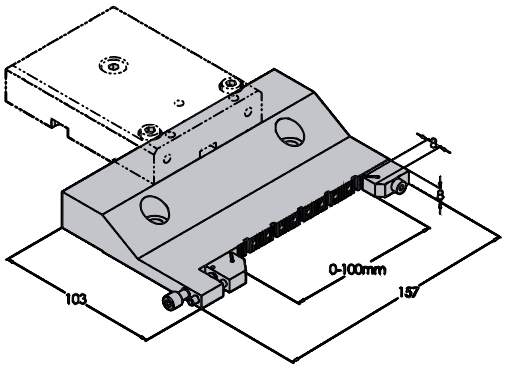

H4620.2 “Mighty” Mini Vise

Small “Toolmakers” vise for workpieces up to 100 x 60 x 12 mm (3.94 x 2.36 x 0.47").

End stop is positioned for securing various workpiece sizes. No reference bore.

Clamping range	0 – 100 mm (0 – 3.94")
Maximum workpiece weight with max, depth of 60 mm (2.362")	3 kg (6.6 lbs)
Weight of the vise	1.9 kg (4.2 lbs)

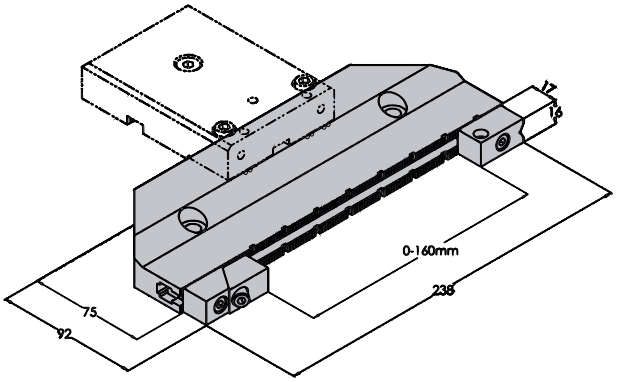

H4620.3 “Mighty” Thin Vise

The sturdy “Toolmakers” vise provides collision-free horizontal clamping of square or rectangular parallel workpieces.

Clamping jaw and end stop can be positioned anywhere along the scale. End stop can be turned around to clamp cylindrical parts in the horizontal Vee blocks.

Reference bore in the end stop helps to indicate position of the workpiece. The distance from the center of the bore to the contact surface is engraved on the vise.

Clamping range	0-160 mm (0"– 6.299")
Max. workpiece weight	5 kg (11.0 lbs)
Weight of the Vise	2.5 kg (5.50 lbs)

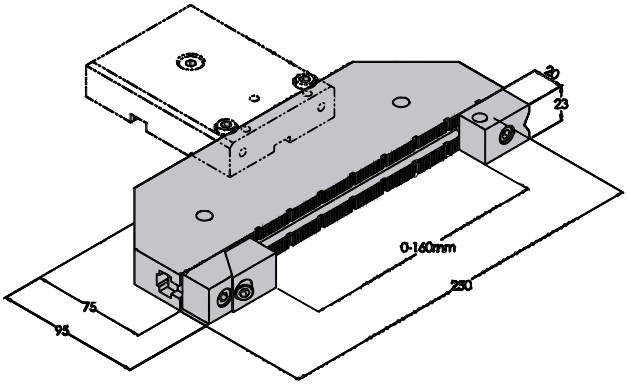

H4620 “Mighty” Vise

Same design as for H 4620.3, but for larger workpieces with more weight.

Clamping range	0-160 mm (0"– 6.299")
Max. workpiece weight	15 kg (33 lbs)
Weight of the vise	3 kg (6.60 lbs)

H4620.1 “Mighty” Vise

Same design as for H 4620, but for workpieces with more weight.

Clamping range	0-160 mm (0"– 6.299")
Max. workpiece weight	30 kg (66.15 lbs)
Weight of the vise	4,5 kg (9.90 lbs)

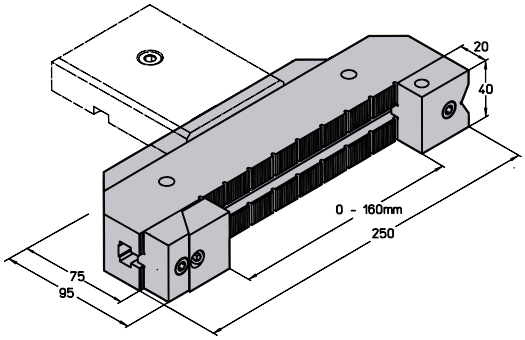

H4620.DI Spacer (2 pcs.)

Allows clamping of two or three workpieces into Vise H 4620.

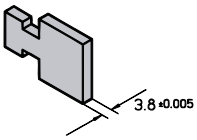

H4620.1 DI Spacer for vise H4620.1

H4620.3 DI Spacer for vise H4620.3

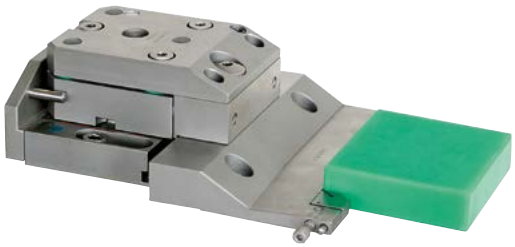

Mini Vise H 4620.2

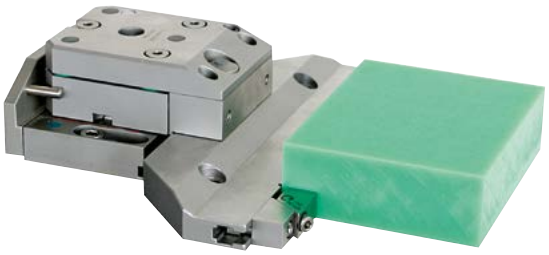

Thin Vise H 4620.3

Vise H 4620.3
End stop turned to hold cylindrical workpices

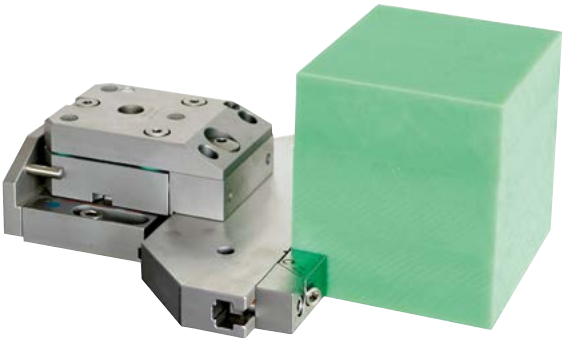

Vise H 4620

Vise H 4620
Endstop turned to hold cylindrical workpieces

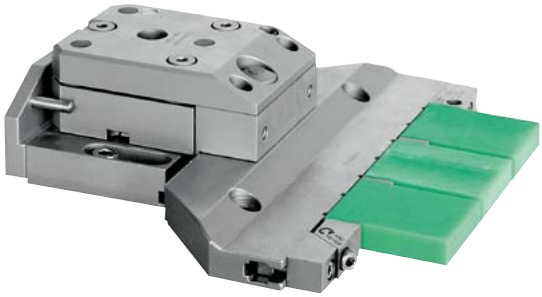

Spacers H4620.3DI
between the workpieces

Clamping System 4000

Prism vises

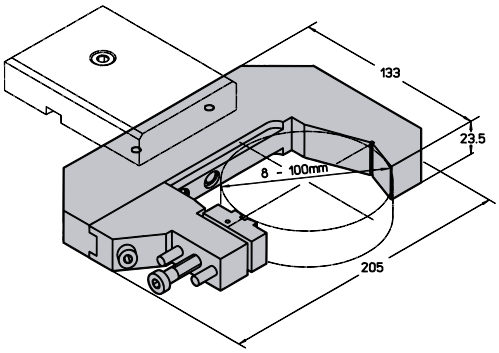

H4630 Prism Vise (Crawdad Claw)

The sturdy prism vise provides collision-free clamping of cylindrical workpieces.

The clamping jaw is positioned and secured in several positions allowing the full range of clamping.

Clamping range	Ø 8 – 100 mm (0.31– 3.94")
Max. workpiece weight	8 kg (17.6 lbs)
Weight of the prism vise	2.5 kg (5.5 lbs)

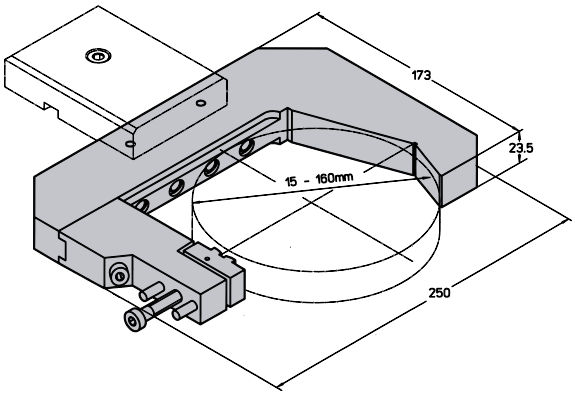

H4631 Prism Vise (Crawdad Claw)

Same design as for H4630, but for a larger clamping range and for a larger workpiece weight.

Clamping range	Ø 15 – 160 mm (0.59– 6.299")
Maximum workpiece weight	15 kg (33 lbs)
Weight of the prism vise	3 kg (6.61 lbs)

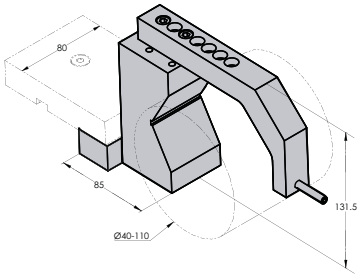

H4635 Prism Holder

For clamping cylindrical workpieces from

Ø 15 to 50 mm (0.59 to 1.97").

Weight	2 kg (4.41 lbs)

H4636 Prism Holder

Similar to H4635 but with clamping range Ø 40 to 110 mm (1.576 to 4.33").

Weight	2,2 Kg (4,85lbs)

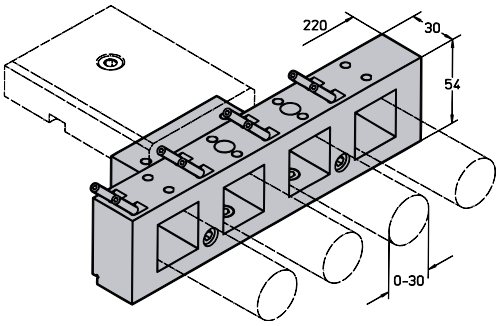

H4640 Prism Holder (4 pcs.)

For clamping cylindrical or rectangular workpieces up to Ø□ 30 mm (1.182").

The holder can be mounted in horizontal or vertical position on all pallets and via these it can be fixed on all clampers.

It can also be mounted directly on the cross beam.

Weight	2 kg (4.41 lbs)

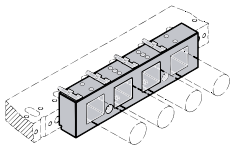

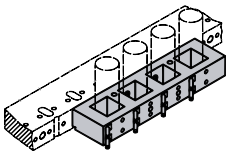

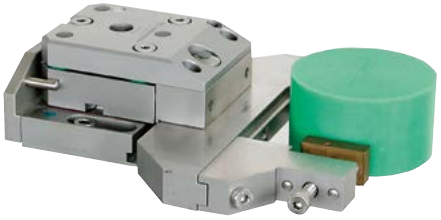

Prism Vise H 4630

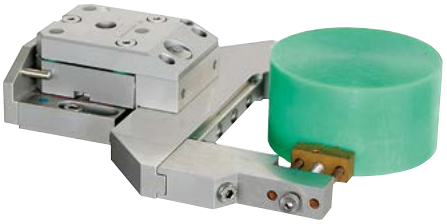

Prism Vise H 4631

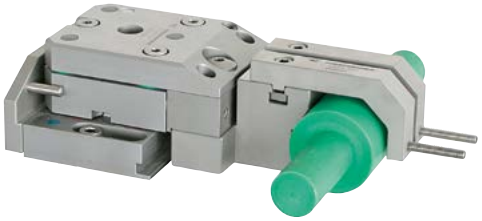

Prism Holder H 4635

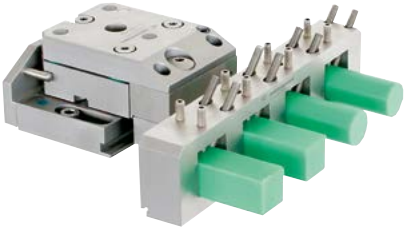

Prism Holder H 4640 (horizontal use)

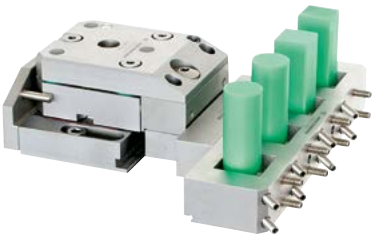

Prism Holder H 4640 (vertical use)

Clamping System 4000

Vertical vises

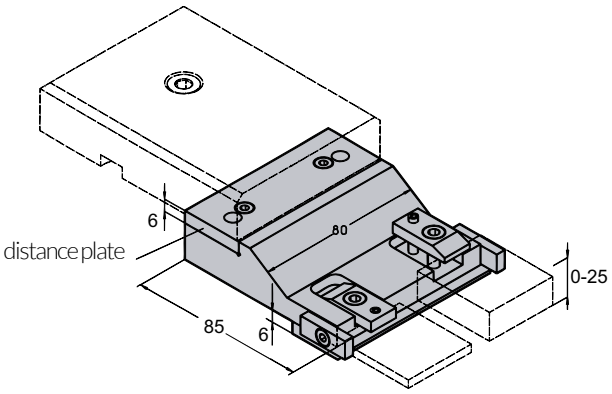

H4536 Vertical Vise

For mounting flat workpieces, up to 25 mm (0.985) in height.

With end stops on the side.

To avoid collision with the lower wire nozzle, the height of the workpiece support can be adjusted by using the distance plate (6 mm/0.236").

Clamping range	0 – 25 mm (0.985")
Max. workpiece weight	7 kg (15.44 lbs)
Weight of the chuck jaw	1.4 kg (3.0 lbs)

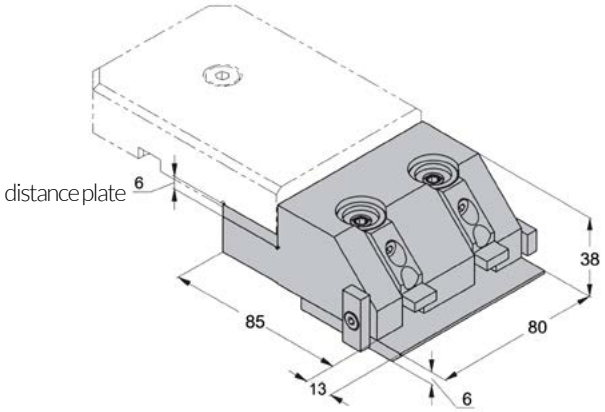

H4537 Vertical Vise

For mounting flat workpieces, up to 41 mm (1.615") in height.

With end stops on the side.

To avoid collision with the lower wire nozzle, the height of the workpiece support can be adjusted by using the distance plate (6 mm/0.236").

Clamping range	0 – 41 mm (1.615")
Max. workpiece weight	15 kg (33.07 lbs)
Weight of the chuck jaw	1.7 kg (3.75 lbs)

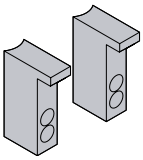

H4537.E Clamping Insert

Via clamping insert H 4537.E clamping height of vertical vise H4537 can be increased to 60 mm (2.364").

Delivered as set with 2 inserts.

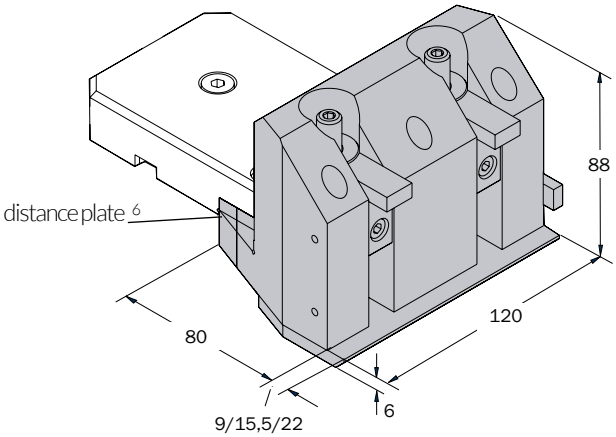

H4538 Vertical Vise

For mounting of workpieces up to 115 mm (4.53") in height. With end stops on the side. Workpiece support can be adjusted to overhang 9 mm (0.355"), 15,5 mm (0.61") or 22 mm (0.867").

To avoid collision with the lower wire nozzle, the height of the workpiece support can be adjusted by using the distance plate (6 mm/0.236").

Clamping range	20–115 mm (0.79–4.53")
Max. workpiece weight	30 kg (66.15 lbs)
Weight of the chuck jaw	4.7 kg (10.36 lbs)

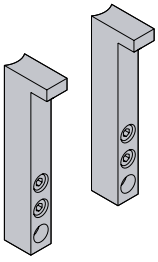

H4538.E Clamping Insert

Via clamping insert H4538.E clamping height of vertical vise H4538 can be increased to 160 mm (6.3").
Delivered as set with 2 inserts.

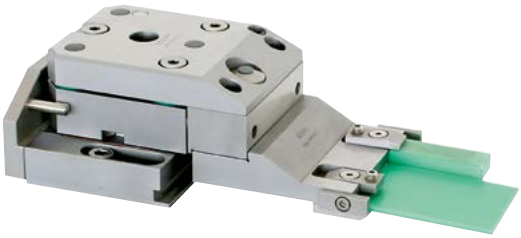

Vertical Vise H 4536

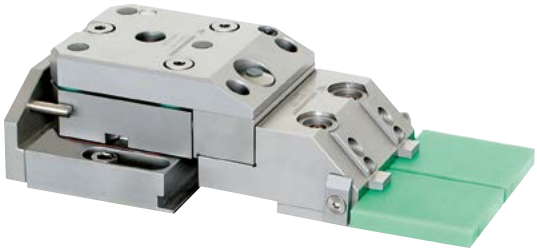

Vertical Vise H 4537
Clamping range 0 to 41 mm (00–1.6150")

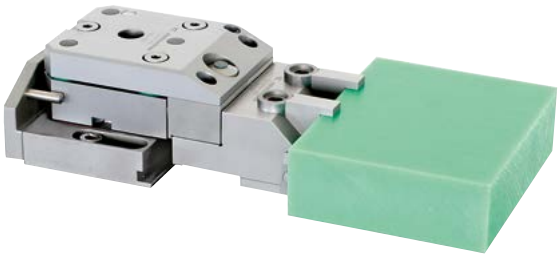

Vertical Vise H 4537

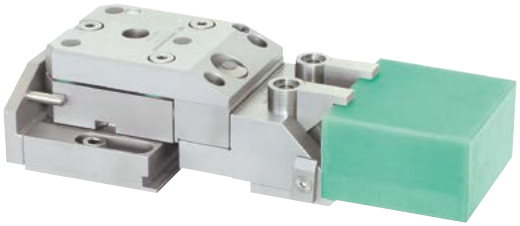

Vertical Vise H 4537 with Clamping Insert H4537E
Clamping range 41 to 60 mm (1.6150–2.3640")

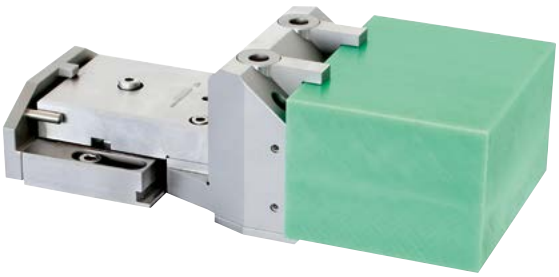

Vertical Vise H 4538
Clamping range 20 to 115 mm (0.790–4.530")

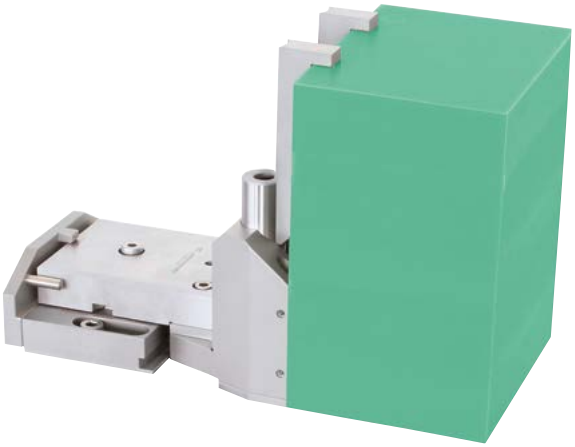

Vertical Vise H 4538 with Clamping Insert H 4538.E
Clamping range 115 to 160 mm (4.530–6.30")

Clamping System 4000

Uni-holder - clamping angle, magnet holder

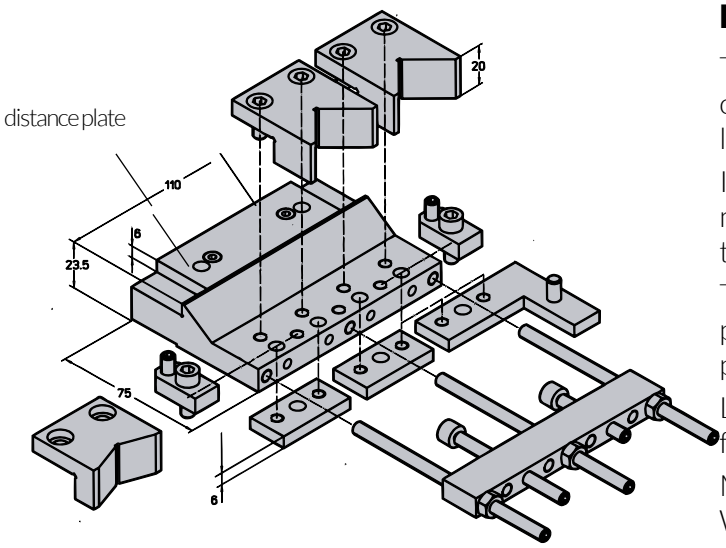

H 4230 Small Uniholder

This universal workpiece holder can be used for clamping and positioning of round, square or rectangular workpieces in the cutting area of the machine.

It is customary to clamp the workpieces outside the machine, on the Presetting Work Station H 4900 or on the Presetting Cube H 4905, and to align them there.

To avoid collision with the lower wire nozzle, the workpiece support can be adjusted by using the distance plate (6 mm / 0.24").

Like all workpiece holders, the uniholder can be used for automatic machine loading with the Pallets H 4105.

Max. permissible workpiece weight 3 kg (6.61 lbs)
Weight depends
on parts used 1 – 1.3 kg (2.20 – 2.86 lbs)

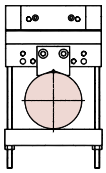
≤ Ø 90

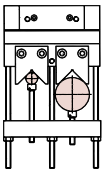
≤ Ø 42

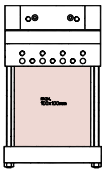
≤ 100 x 100

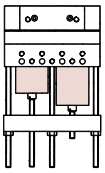
≤ 80 x 42

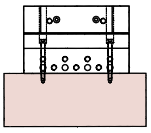
≤ 200 x 50

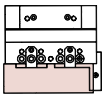
≤ 110 x 40

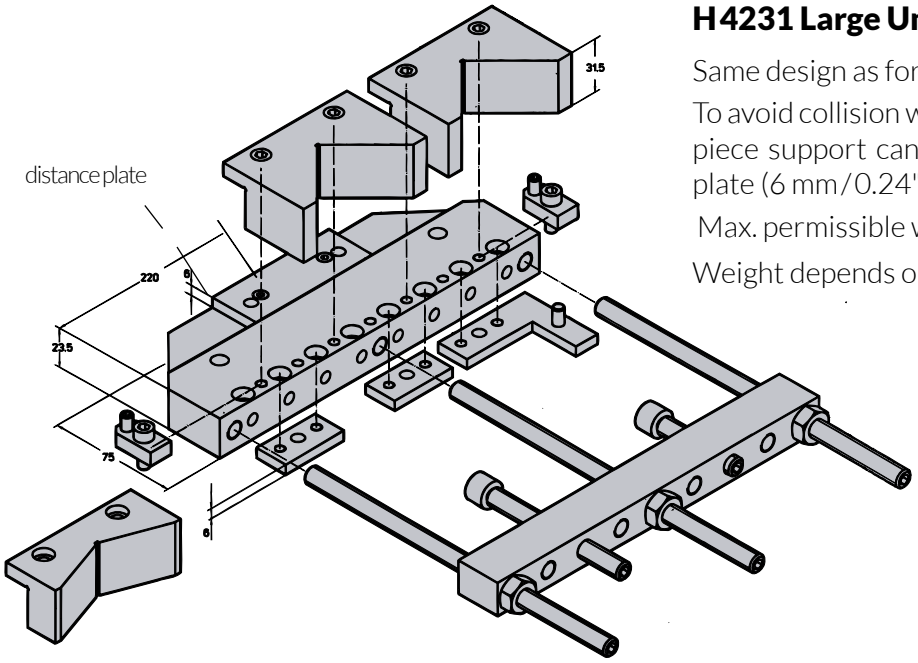

H 4231 Large Uniholder

Same design as for H 4230, but for larger workpieces.

To avoid collision with the lower wire nozzle, the workpiece support can be adjusted by using the distance plate (6 mm / 0.24").

Max. permissible workpiece weight 12 kg (26.5 lbs)

Weight depends on parts used
2.1 – 3.5 kg (4.62 – 7.71 lbs)

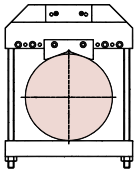
≤ Ø 160

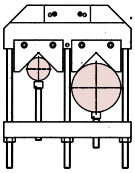
≤ Ø 85

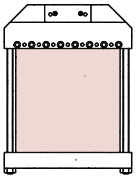
≤ 180 x 170

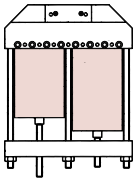
≤ 145 x 85

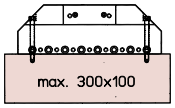

≤ 300 x 100

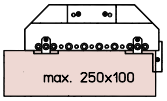

≤ 250 x 100

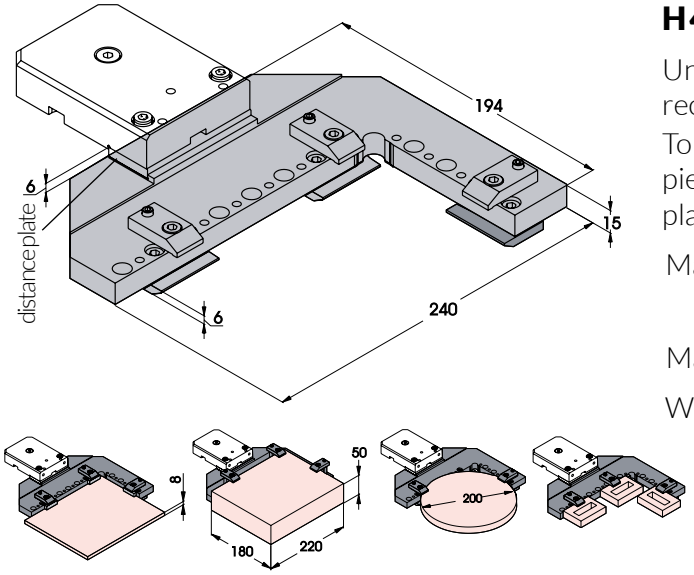

H 4225 Clamping Angle

Universal holder for collision-free clamping of rectangular and cylindrical workpieces.
To avoid collision with the lower wire nozzle, the workpiece support can be adjusted by using the distance plate (6 mm / 0.24").

Max. workpiece size	220x180 mm/Ø 200 mm (8.7x7.1"/ Ø 7.9")
Max. workpiece weight	30 kg (66 lbs)
Weight approx.	3 kg (6.60 lbs)

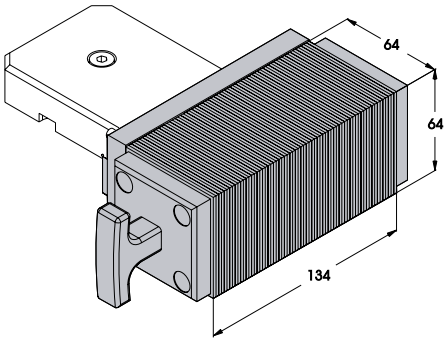

H 4270 Magnet Holder

Universal magnet holder for collision-free clamping of rectangular workpieces.

Holding force	50 N/cm²
Weight	approx. 5 kg

Clamping System 4000

Basic holder, accessories

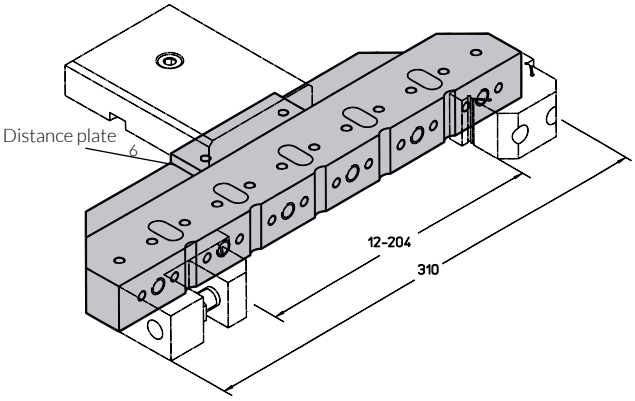

H4233 Basic Holder

This Basic Holder is the small version of the cross beam. It is placed with a pallet directly on the clamper. For example, Beam Vise Kit can be mounted to front surface.

The presetting of the workpiece should be done on a granite surface plate or on the presetting work station.

Max. workpiece weight of parallel workpieces with a maximum depth of 130 mm (5.12") 30 kg (66.15 lbs)
Weight of the Basic Holder 6 kg (13.23 lbs)

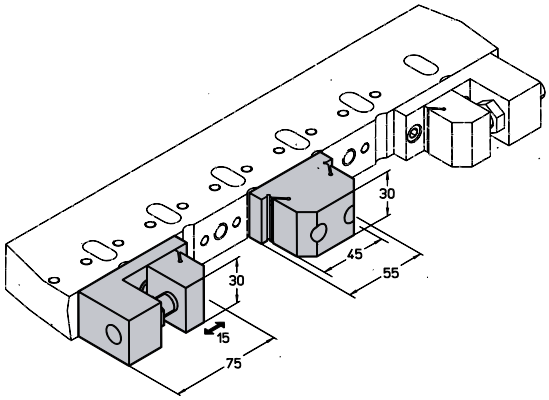

Beam Vise Kit consisting of: H4312 Solid Jaw, H4312.1 Clamper

For collision-free clamping of parallel workpieces directly on the cross beam.

The presetting of the workpiece should be done on a granite surface plate.

Max. workpiece weight of parallel workpieces with a max. depth of 130 mm (5.12") 30 kg (66.15 lbs)

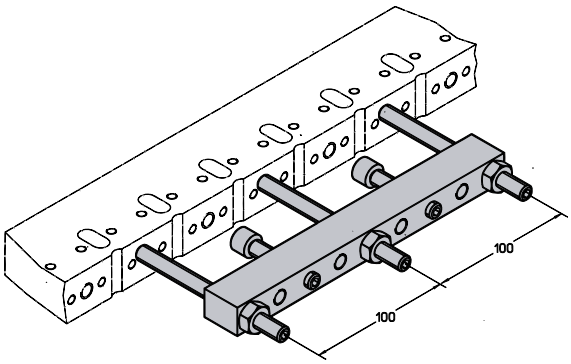

H4331 Clamping Beam

For collision-free clamping of rectangular workpieces and, supplemented by the set of Vee blocks, also for collision-free clamping of cylindrical workpieces, directly on the cross beam/basic holder.

If a uniholder H4231 is provided, the clamping beam is not required, as these parts are already contained in the uniholder.

Max. permissible workpiece weight 8 kg (17.64 lbs)

H4331L Clamping Beam

Clamping beam with long threaded rods .

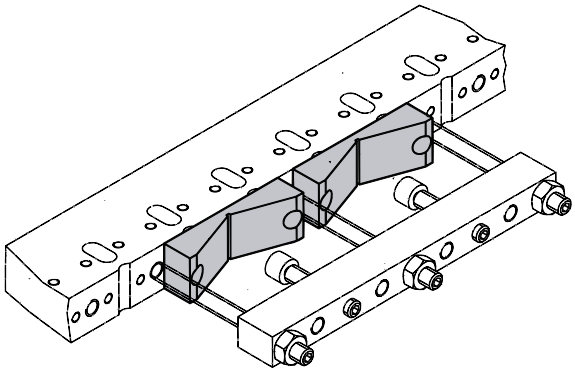

H4332 Set of Vee Blocks (2 pcs.)

For clamping cylindrical workpieces with the Clamping Beam H4331.

Preliminary setting of the workpiece should be done on the granite surface plate.

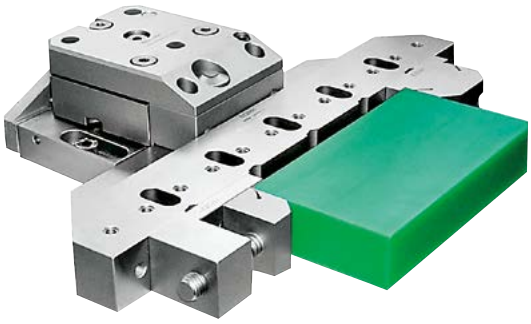

Basic Holder H4233 with Beam Vise Kit H4312/H4312.1

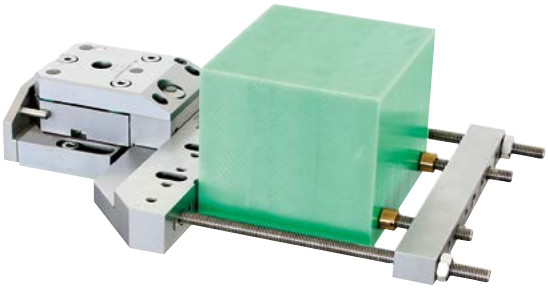

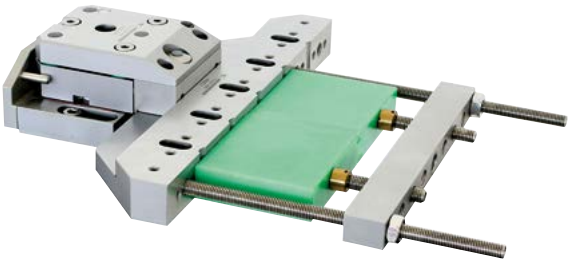

Basic Holder H4233 with Clamping Beam H4331L

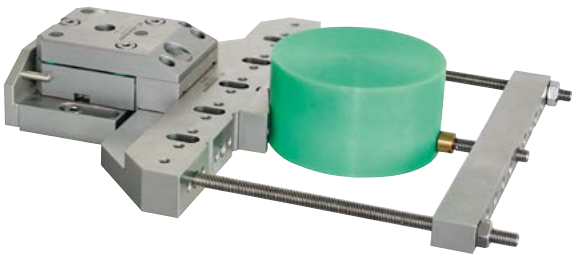

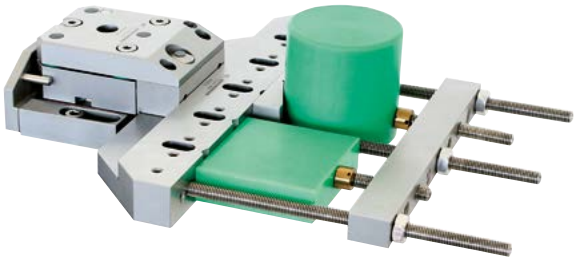

Basic Holder H4233 with Clamping Beam H4331L and Vee Block Set H4332

Clamping System 4000

Pallet clamper, vertical-/swivelling unit - accessories

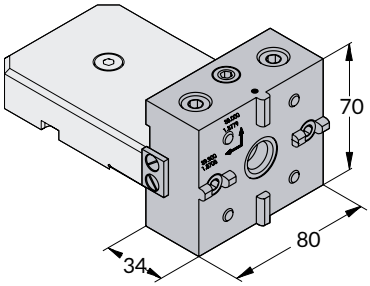

H4202 Pallet Clamper

For clamping pallets and electrode holders of the Clamping System 5000 for Sinking EDMs.

Can be mounted on the face side of a M- or P-Pallet, vertically or horizontally to a Swivelling Unit H4420, to the Vertical Unit H4410 and to the Adapter H4421.

The position of Vee block center to the exterior surfaces is engraved on the face but can also be found with the Reference Pallet H4203.

Weight.	1.3 kg (2.9 lbs)

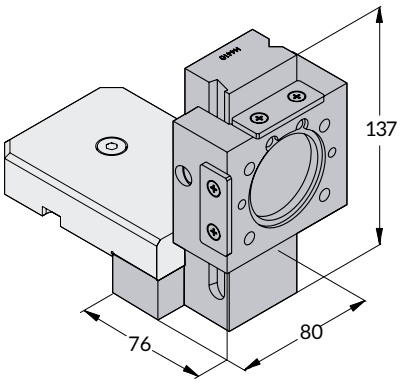

H4410 Vertical Unit

Vertical unit with variable height adjustment is used with Pallets H4005, H4105 or H4110 M/P.

A Swivelling Unit H4420, a Pallet Clamper H4202 (vertically and horizontally) or an Adapter H2495 can be mounted to the front surface.

Adjustment range:	65 mm (2.56")
Weight:	1.7 kg (3.7 lbs)

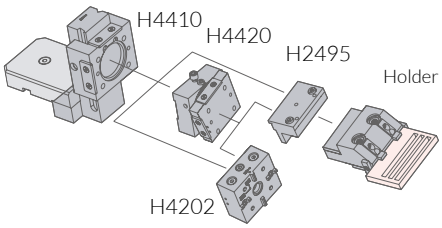

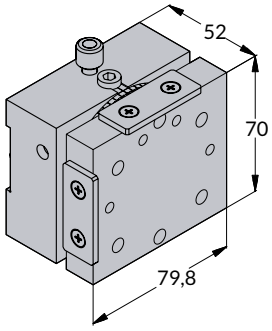

H4420 Swivelling/Indexing Unit

Mountable directly to the Vertical Unit H4410, the Adapter H4421 or to the Pallet H4005, H4105 and H4110.

A Pallet Clamper H4202 or an Adapter H2495 can be mounted to the front surface.

Indexing range:	± 90° in 5° steps
Indexing accuracy:	≤ 10'
Continuously swivelling range	360°
(Can be set and locked via the vernier scale)	
Weight:	2 kg (4.4 lbs)

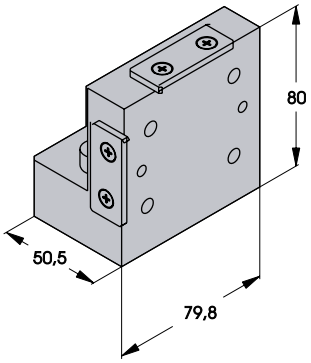

H4421 Mounting Angle

The H4421 is the link between the machine table and a Swivelling/Indexing Unit H4420, a Pallet Clamper H4202 or an Adapter H2495.

Weight: 2,9 Lbs

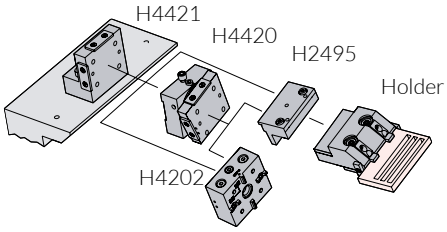

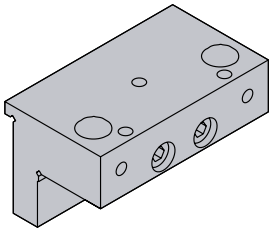

H2495 Adapter

The adapter is the link between the Vertical Unit H4410, the Swivelling Unit H4420 or the Mounting Angle H4421 and all holders of the Clamping System 4000.

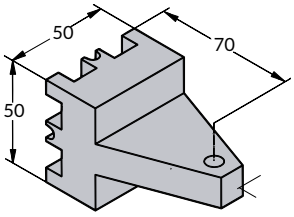

H4203 Reference Pallet

For determining the central position of the Pallet Clamper H4202 and of A-Axes with manual or pneumatic clamper.

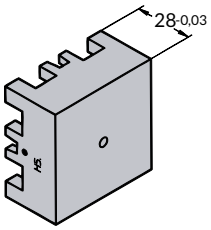

H5.50R Pallet

Rust-proof pallet 50 x 50 mm (1.97 x 1.97") without clamping journal, for mounting of electrodes and workpieces.

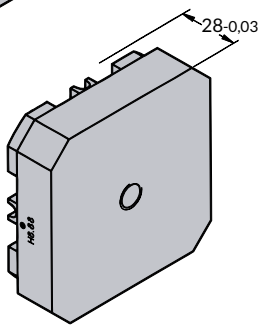

H8.88R Pallet

Rust-proof pallet 88 x 88 mm (3.46 x 3.46") without clamping journal, for mounting of electrodes and workpieces.

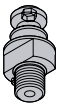

H5.611R Clamping Journal (stainless)

H5.611.1R Centering Bush (stainless)

For clamping of pallets and holders in the H 4202 Pallet Clamper and in the H 8.. series clamper of the Clamping System 5000.

H6.611R Clamping Journal (stainless)

for clamping the pallets and holders in the H 6.. series clamper of the Clamping System 5000.

Set-up and presetting stations

Set-up and presetting of workpieces outside the machine releases Wire EDM of unproductive set-up times and significantly reduces machine down time. Presetting stations can be delivered as moveable or stationary unit.

H4900 Presetting Work Station

The presetting work station is delivered complete in a sturdy stainless steel trolley and a granite surface plate 500 x 500 mm (19.7" x 19.7") of accuracy class 00.

A Clamper H4000 is mounted on the granite plate on a riser. A small reference column (same height is the riser) used to support the workpieces while presetting them is also included.

The opposite guide beam, aligned parallel to the clamper, serves as a reference wall for the surface gauge.

Dimensions (WxDx H) approx. 760 x 555 x 1080 mm (29,9213" x 21,8504" x 42,51969")

H4900.1 Presetting Work Station

Similar to H4900, but without the guide beam.

3rd axis is adjusted by positioning the pallet to the rear.

H4901 Presetting Work Station

Similar to H4900, but without trolley.

Dimensions (WxDxH) approx. 500 x 500 x 200 mm (19.7" x 19.7" x 7.88")

H4901.1 Presetting Work Station

Similar to H4901, but without the guide beam.

3rd axis is adjusted by positioning the pallet to the rear.

H4905 Presetting Cube

Granite presetting cube is used on a larger granite plate together with the reference column. Includes the H4000 clamper and the reference column.

It can be placed on two sides ground to the H4000, and is suitable for presetting small workpieces.

Dimensions (WxDxH) approx. 150 x 150 x 200 mm (5.91" x 5.91" x 7.88")

Solutions for all applications

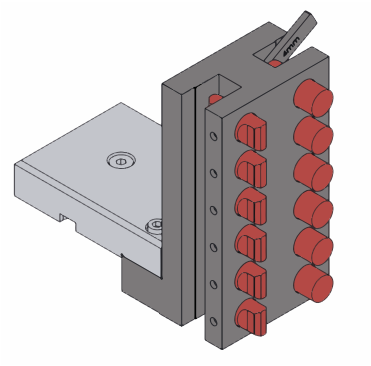

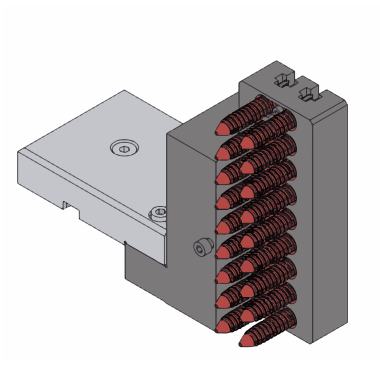

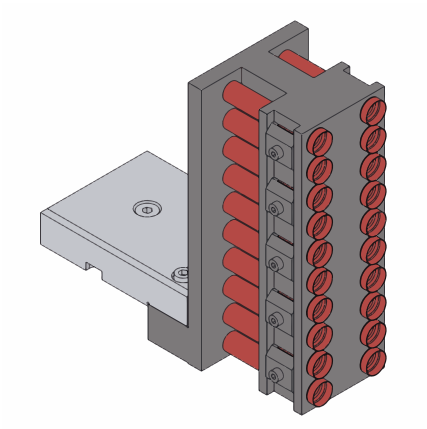

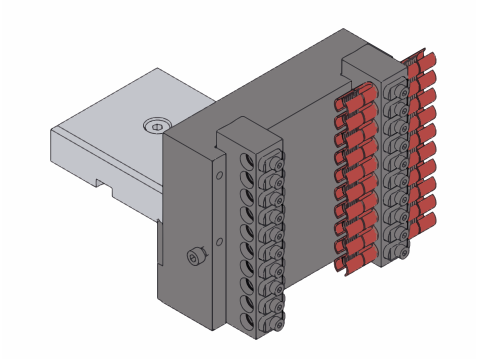

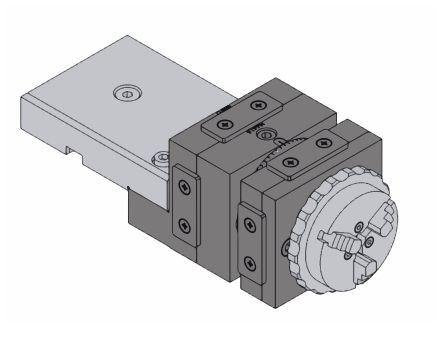

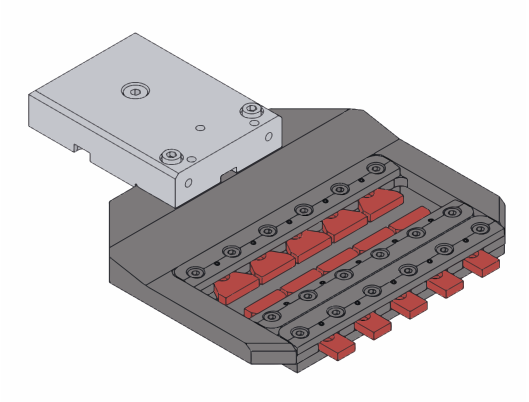

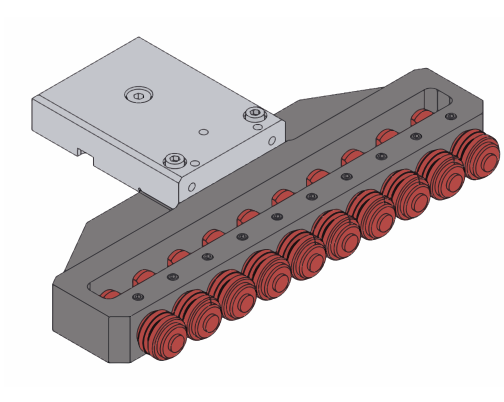

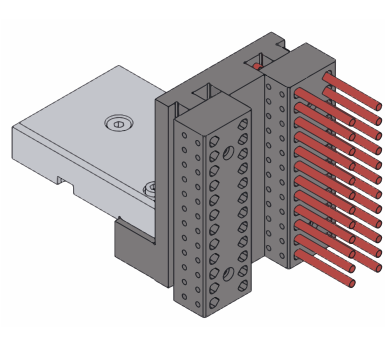

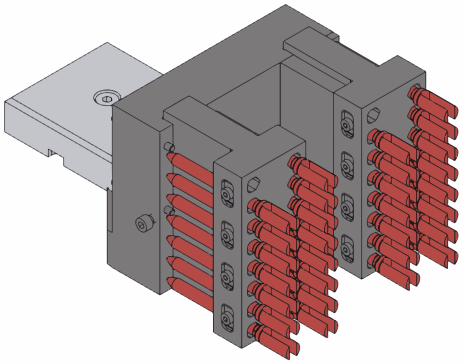

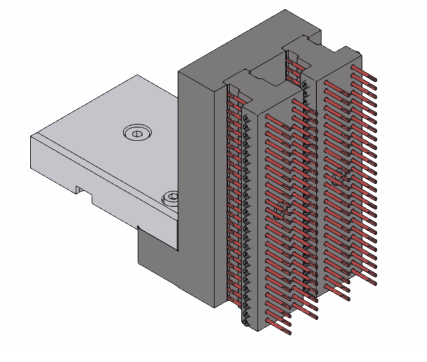

Solutions for all applications

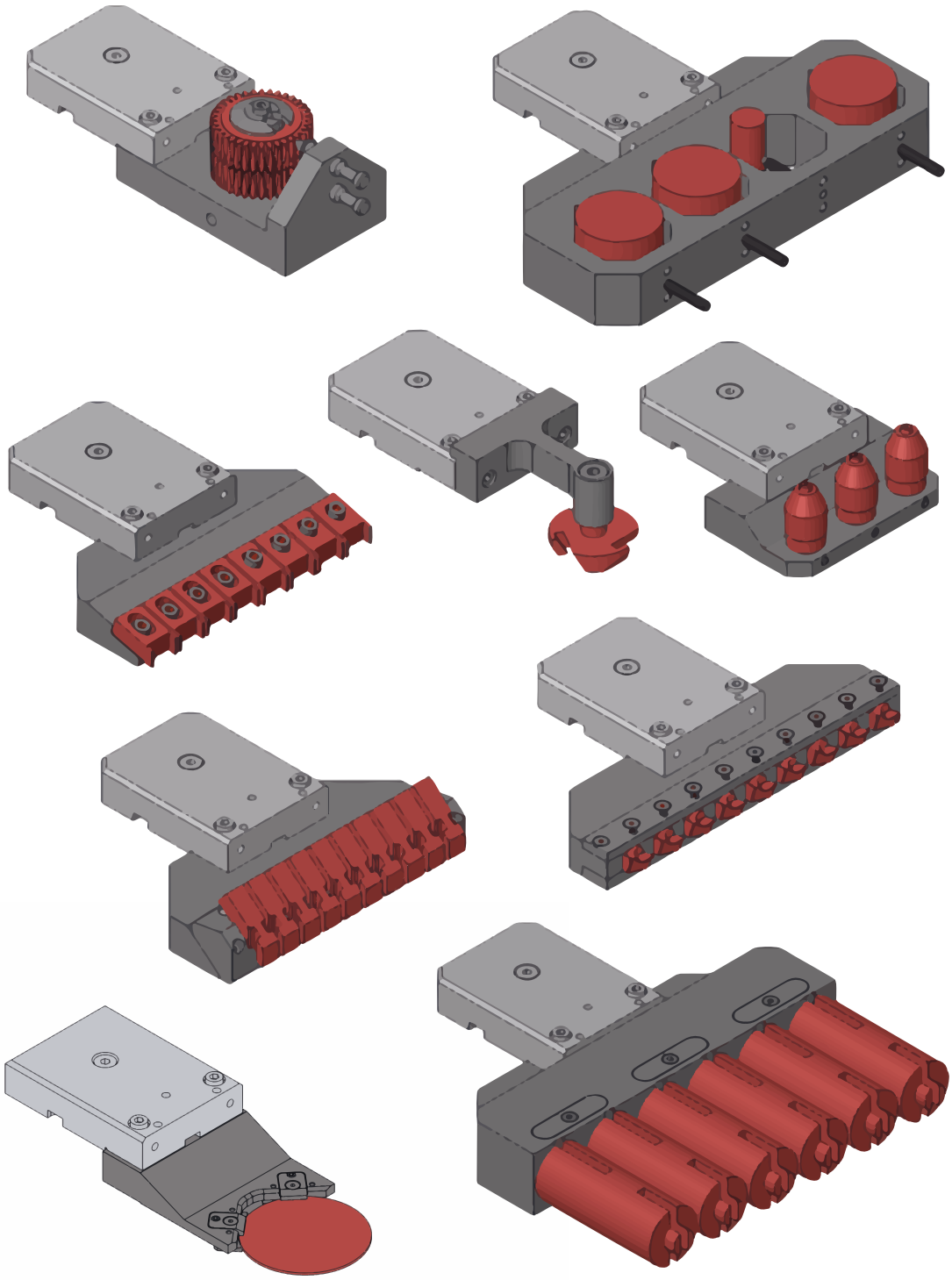

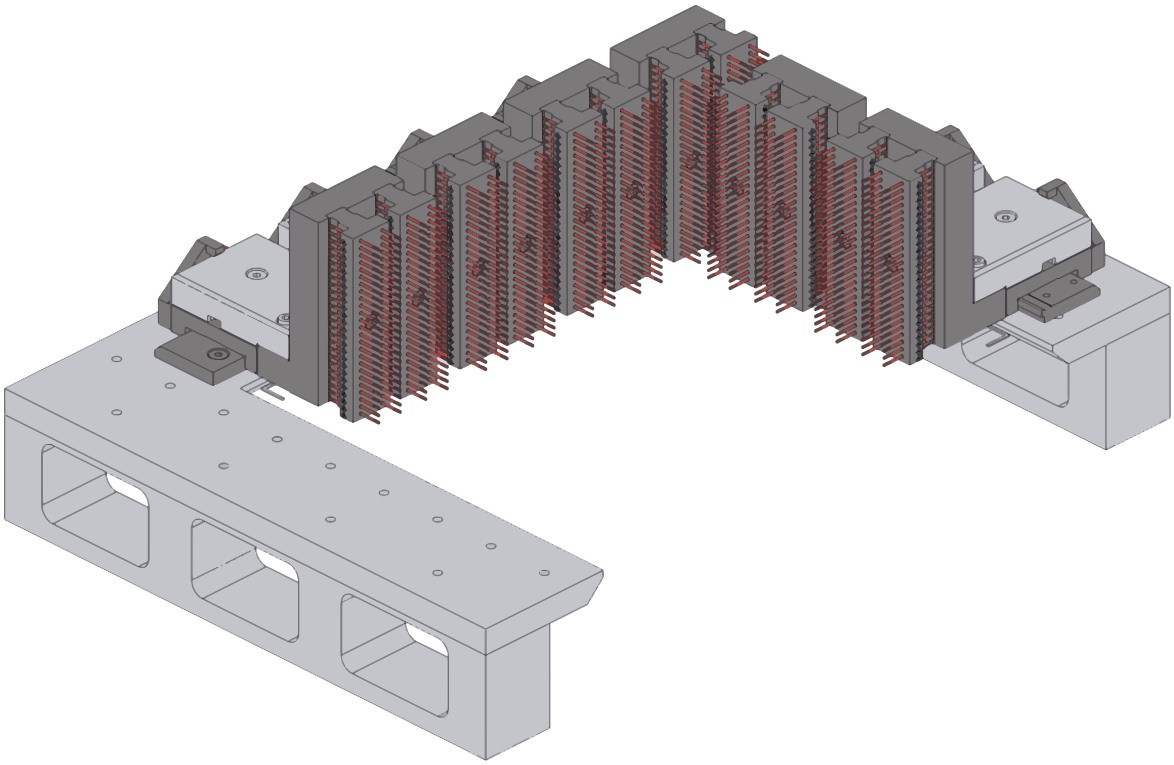

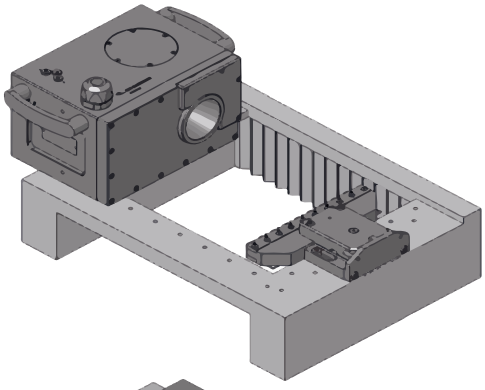

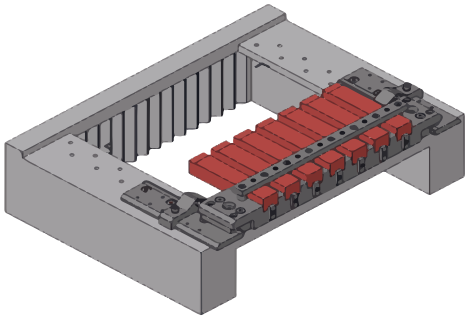

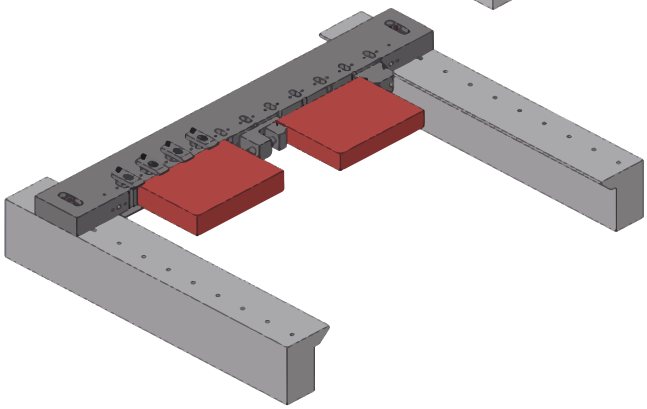

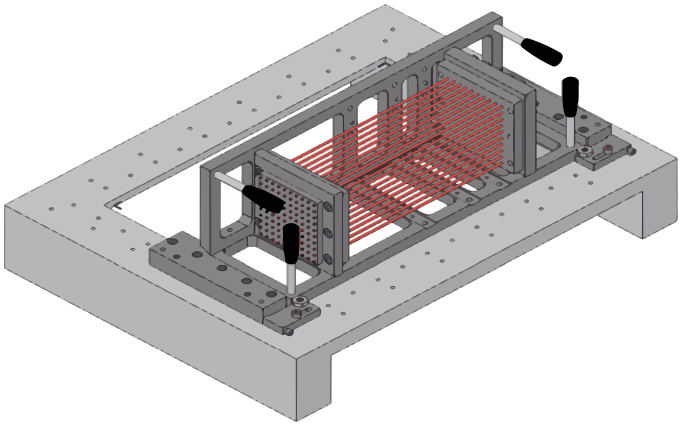

Indexing /Rotating Spindles

For high precision wire turning EDM

Advancing into new technology

With our rotating and indexing spindles the range of EDM applications will be extended. EDM turning and grinding enables a high precision manufacturing of rotation symmetric shapes and structures.

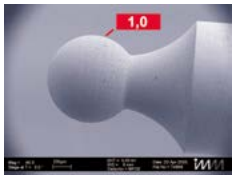

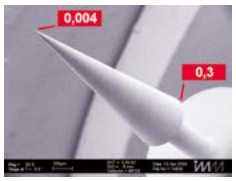

EDM turning/grinding - alternative to hard turning/ grinding

- Turning/grinding of rotation symmetrical, dynamically balanced parts with highest surface quality.
- Economic production of parts with minimal structures, as well as micro parts made of stainless steel, hard metal or nonferrous metal and even conductive ceramics.

Indexing / Rotating Spindle - example of use

1. Adjustable clamping element for high precision workpiece run-out adjustment
2. Hexagon cutting in indexing mode
3. Groove cutting in turn while burn mode
4. Ball cutting in rotating mode

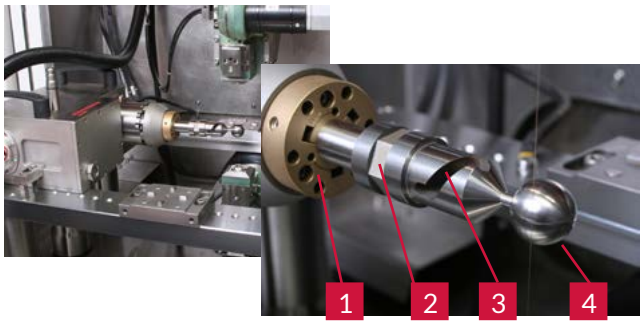

Indexing/ Rotating Spindles

Rotating Spindle FJR80

Mini Indexing / Rotating Spindle FJR42MRS

Indexing / Rotating Spindle FJR80NC

Equipment components

Rotating Spindle FJR80 and Indexing / Rotating Spindle FJR80NC
are designable with:

- Face plate
- Manual or pneumatic clamper
- Adjustable Clamping Element
- Customer solutions

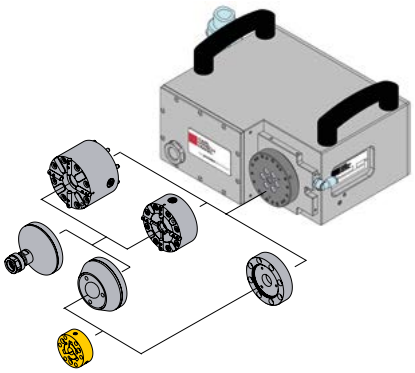

Accessories

For rotating spindles

Adjustable clamping element - EDM turning or grinding in highest precision

High accuracy requires a precise concentricity. With adjustable clamping element made by Carl Hirschmann the concentricity can be quickly and easily adjusted to ≤ 0.001 mm (0.000004”). Run-out adjustment can be done in the rotating spindle or external in a presetting spindle.

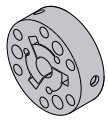

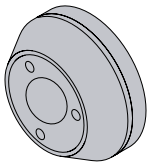

H5.83.46R-xx Adustable Clamping Element (Brass)
For accurate alignment of workpiece concentric run-out.
The adjustable clamping elements will be fixed in the Clamping Element Holder H5.83.45R.

Adjustable concentricity	≤ 1 µm
Clamping diameter (Ø xx)	Ø 1 mm to Ø 20 mm

(On orders please specify exact diameter xx)

H5.83.45R Clamping Element Holder (rust-proof)

For mounting of H5.83.46R-xx Adjustable Clamping Element.

Order clamping journal H5.611R or H6.611R separate!

Workpiece adjustment with adjustable clamping element

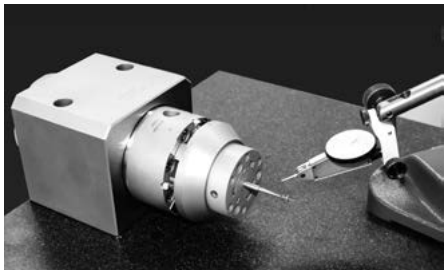

Adjustment on presetting or rotating spindle

Run-out adjustment

Tumbling motion adjustment

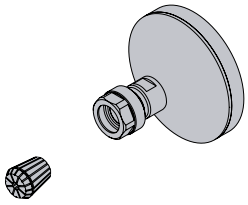

H5.83.40R.MAC Collet Holder (rust-proof)

Clamping nut, nickel-plated. For collet H 50.41

Radial run-out (without collet)	0,005 mm

Order clamping journal H5.611R or H6.611R separatly

H50.41 Collet ER/ESX 16

Clamping range infinitely from Ø0,5 to Ø10 mm
Collet size Ø 1 - Ø 10 mm, 1 mm step
Radial run-out until Ø 5 mm = 0,01, from Ø 6 mm = 0,02 mm
(not rust-proof)

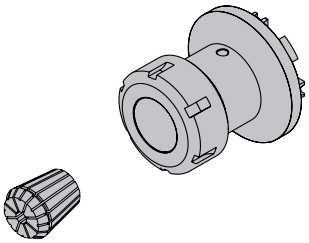

H5.83.50R Collet Holder (rust-proof)

Clamping nut, nickel-plated. For collet H5.50.51 (ER40)

Radial run-out (without collet)	0,01 mm
Weight:	1,1 kg

Order clamping journal H5.611R or H6.611R separatly

H5.50.51 Collet ER/ESX 40

Clamping range Ø3 - Ø26 mm
Collet size Ø 4 - Ø 26 mm, 1 mm step
Radial run-out until Ø6 mm 0,015, from Ø7 mm= 0,02 mm
(not rust-proof)

Rotary Indexing Tables

For high precision wire EDM

Rotary Indexing Tables

Rotary indexing tables extend the field of applications for wire EDM significantly. Curved forms and finest structures, as to be found in medicine technology (fluidics) or aviation (turbine blades) or at cutting tools (PCD machining), can be manufactured only with multi-axis EDM machining.

One Axis Indexing Tables

Two Axes Indexing Tables

Multiple Axes Indexing Tables

Hollow Axes Indexing Tables

Common characteristics

- High positioning accuracy (≤ ±5“)
- Long life AC drive
- Direct measuring system (encoder)
- Rust-proof
- Completely sealed

Versions with

- Face plate
- Manual or pneumatic chuck
- SK or HSK taper shaft
- Adjustable clamping element
- Hollow axes
- Special clamping solutions

Applications

- Medical technology (systems, instruments, implants)
- Aerospace (sensor measuring systems, micro-pumps, micro-valves, turbine blades)
- PCD/CBN tools
- Automotive (electric plug connections, injection moulding)
- Tool making (production of electrodes, direct structuring of workpieces, building of ejector pins

Our Clamping Systems

Overview

Clamping System	4000	5000	8000	9000	µ-Prisfix
Use for	Workpiece clamping and palletizing for wire EDM	Electrode / workpiece clamping and palletizing	Workpiece and fixture palletizing	Workpiece and fixture palletizing	Micro clamping system for high precision part manufacturing
Wire EDM	x				x
Sinking EDM		x	x	x	x
Micro manufacturing		x			x
Chipping		x	x	x	x
Laser machines		x	x	x	x
Mounting		x	x	x	x
Measurement technique		x	x		x
Repetitive accuracy	≤ 0.002 mm ≤ 0.00008”	≤ 0.002 mm ≤ 0.00008”	≤ 0.002 mm ≤ 0.00008”	≤ 0.005 mm ≤ 0.0002”	≤ 0.0001mm ≤ 0.000004”
Max. workpiece weight	150 kg	100 kg	300 kg	1000 kg / chuck	
Clamping force	---	18.000 N	60.000 N	10.000 N/ chuck pneumatic 26.000 N / chuck hydraulic	500 N
Automatic changable with handling units	x	x	x	x	x

Detailled information you can find in our catalogues and on our homepage **www.carlhirschmann.de**.
For questions and detailled advice please contact our sales staff.

Download area

the **precision** benchmark

CARL HIRSCH MANN

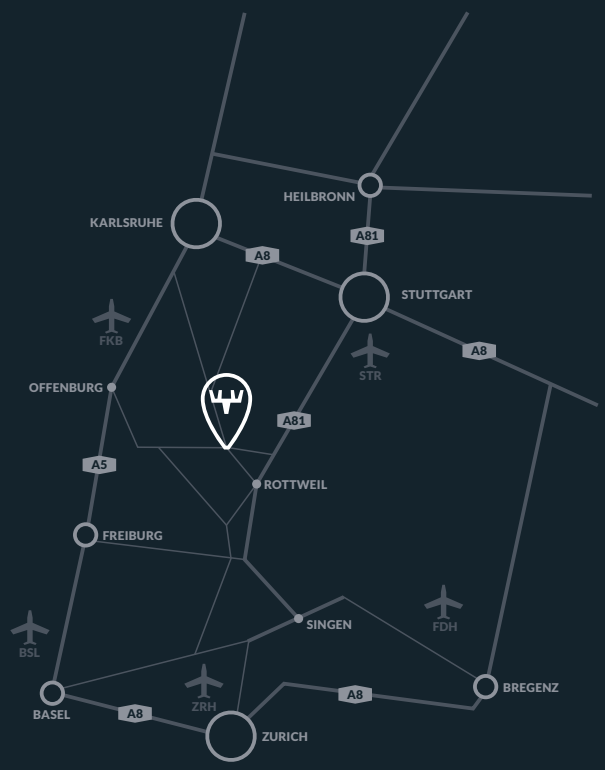

HEADQUARTER

Carl Hirschmann GmbH
Kirchentannenstraße 9
78737 Fluorn-Winzeln
Germany

T +49 7402 183-0
F +49 7402 183-10
E info@carlhirschmann.de

USA

Carl Hirschmann, Inc.
165 East Commerce Drive Ste 104
Schaumburg, IL 60173
USA

T +1 847 468 9700
F +1 847 468 9701
E info@carlhirschmann.us

CHINA

Carl Hirschmann
Room C528, Block 180,
South Chang Jiang Road
Bao Shan District, Shanghai
P.R. CHINA 200433

T +86 139 16 13 58 45
E info@carlhirschmann.com.cn

carlhirschmann.de